AMD

# CABLE SUPPORT SYSTEMS


Comprehensive range of metal cable tray, ladder, and accesories designed for industrial and building applications.

Electrical & Telecom

Industrial & Building

CATALOG PRODUCT

## TENTANG PERUSAHAAN

PT Golden Piping Indonesia (GPI) adalah perusahaan yang bergerak di bidang manufaktur, distribusi, dan solusi sistem perpipaan terintegrasi untuk berbagai sektor infrastruktur dan industri.

Dengan pengalaman dan komitmen tinggi terhadap kualitas, GPI memproduksi serta menyediakan beragam produk pipa dan fitting berbahan HDPE, PVC, PP-R, Steel, dan material lainnya, yang dirancang untuk memenuhi kebutuhan air bersih, drainase & sewerage, jaringan gas, listrik & telekomunikasi, sistem proteksi kebakaran, pertanian & irigasi, hingga aplikasi industri dan bangunan.

Didukung oleh teknologi manufaktur modern, tenaga ahli berpengalaman, dan jaringan distribusi luas di seluruh Indonesia, GPI hadir sebagai one-stop piping solution provider yang menyediakan produk unggulan, layanan teknis profesional, serta dukungan instalasi dan engineering.

Dengan semangat inovasi dan keberlanjutan, GPI terus berkomitmen untuk memberikan solusi perpipaan yang aman, efisien, dan ramah lingkungan.

## *ABOUT COMPANY*

*PT Golden Piping Indonesia (GPI) is a company engaged in manufacturing, distribution, and integrated piping system solutions for various infrastructure and industrial sectors.*

*With strong experience and a deep commitment to quality, GPI manufactures and supplies a wide range of pipes and fittings made from HDPE, PVC, PP-R, steel, and other materials, designed to meet the needs of clean water supply, drainage and sewerage, gas networks, electrical and telecommunication systems, fire protection, agriculture and irrigation, as well as industrial and building applications.*

*Supported by modern manufacturing technology, experienced professionals, and an extensive distribution network throughout Indonesia, GPI has established itself as a one-stop piping solution provider, delivering high-quality products, professional technical services, and reliable installation and engineering support.*

*Driven by a spirit of innovation and sustainability, GPI remains committed to providing safe, efficient, and environmentally friendly piping solutions for a better and more sustainable future.*

# NEMA STANDARDS

National Electrical Manufacturers Association

NEMA is the largest trade organization in the U.S. representing the interests of electroindustry manufacturers. Its 575 member companies manufacture products used in the generation, transmission and distribution, control, and end-use of electricity.

Many of NEMA's voluntary standards have been approved as American National Standards or adopted by the Federal Government. Over 350 NEMA standards cover a wide range of subjects including telecommunication systems, motors and generators, electrical enclosures, electrical wiring, power guidelines for X-Ray machines and many more subjects.

It is NEMA's belief that standards play a vital part in the design, production, and distribution of products destined for both national and international commerce. Sound technical standards benefit the user, as well as the manufacturer, by improving safety, bringing about economies in product, eliminating misunderstandings between manufacturer and purchaser, and assisting the purchaser in selecting and obtaining the proper product for his particular need.

## NEMA STANDARDS
## VE 1-1991

*REV. NOVEMBER 1993*

### Scope

This standard covers continuous, complete, metallic systems of ladder, trough, solid-bottom or channel cable tray intended for, but not limited to, the support of power, control and signal cables.

the support of power, control and signal cables.

# CONTENTS

AMD

## NEMA STANDARDS VE 1-1991

*REV. NOVEMBER 1993*

# CONTENTS

AMD

# CONTENTS

AMD

## SECTION 1
## Referenced Standards & Definitions

### 1.1 REFERENCED STANDARDS

In this publication, reference is made to the standards listed below. Copies are available from the indicated source.

**ANSI/NFPA 70-93 National Electrical Code**

**American National Standards Institute**
11 West 42nd Street
New York, NY 10036

**National Fire Protection Association**
Batterymarch Park
Quincy, MA 02269

| | |
|---|---|
| **A123-89** | Zinc (Hot-Dip Galvanized) Coatings on Iron and Steel Products, Specifications for |
| **A525-87** | General Requirements, Steel Sheet, Zinc-Coated (Galvanized) by the Hot Dip Process, Specifications for |
| **B633-85** | Electrodeposited Coatings of Zinc on Iron and Steel, Specifications for |
| **B766-86** | Electrodeposited Coatings of Cadmium, Specification for |

**American Society for Testing and Materials**
1916 Race Street
Philadelphia, PA 19103

### 1.2 DEFINITIONS

**Metallic Cable Tray System** - An assembly of cable tray straight sections, fittings, and accessories that forms a rigid structural system to support cables.

*NEMA Standard 11-15-1984*

**Ladder Cable Tray** - A prefabricated metal structure consisting of two longitudinal side rails connected by individual transverse members.

*NEMA Standard 11-15-1984*

**Trough Cable Tray** - A prefabricated metal structure greater than 4" (102mm ) in width consisting of a ventilated bottom* within integral or separate longitudinal side rails.

*A cable tray bottom having openings sufficient for the passage of air and utilizing 60 percent or less of the plan area of the surface to support cables.

*NEMA Standard 11-15-1991*

**Solid Bottom Cable Tray** – A prefabricated metal structure consisting of a bottom with no openings within integral or separate longitudinal side rails.

*NEMA Standard 11-15-1984*

**Straight Section** – A length of cable tray which has no change in direction or size.

*NEMA Standard 11-15-1984*

**Cable Tray Fitting** – A device which is used to change the direction or size of a cable tray system.

*NEMA Standard 11-15-1984*

**Cable Tray Connector (Splice Plate)** – A device which joins cable tray straight sections and fittings, or both.

The basic types of connectors (splice plates) are:

1. Rigid
2. Expansion
3. Adjustable
4. Reducer

*NEMA Standard 11-15-1984*

**Horizontal Elbow (Horizontal Bend)** – A cable tray fitting which changes the direction in the same plane.

*NEMA Standard 11-15-1984*

**Horizontal Tee** – A cable tray fitting which is suitable for joining cable trays in three directions at 90° intervals in the same plane.

*NEMA Standard 11-15-1984*

**Horizontal Cross** – A cable tray fitting which is suitable for joining cable trays in four directions at 90° intervals in the same plane.

*NEMA Standard 11-15-1984*

**Vertical Elbow (Vertical Bend)** – A cable tray fitting which changes direction to a different plane.

An inside vertical elbow changes direction upward from the horizontal plane.

An outside vertical elbow changes direction downward from the horizontal plane.

*NEMA Standard 11-15-1984*

**Reducer (Straight,Right Hand,Left Hand)** – A cable tray fitting which is suitable for joining cable trays of different widths in the same plane.

A straight reducer has two symmetrical offset sides. A right-hand reducer, when viewed from the large end, has a straight side on the right.

A left-hand reducer, when viewed from the large end, has a straight side on the left.

*NEMA Standard 11-15-1984*

**Channel Cable Tray** – A prefabricated metal structure consisting of a one-piece ventilated bottom or solid-bottom channel section, or both, not exceeding 6" (152 *mm) in width.*

*NEMA Standard 11-15-1984*

**Accessories** – Devices which are used to supplement the function of straight sections and fittings, and include such items as dropouts, covers, conduit adapters, hold-down devices and dividers.

*NEMA Standard 11-15-1984*

**Cable Tray Support** – A device which provides adequate means for supporting cable tray sections and fittings.

The basic types of cable tray supports are:

1. Cantilever bracket
2. Trapeze
3. Individual rod suspension.

*NEMA Standard 11-15-1984*

**Cable Tray Support Span** – The distance between the center line of supports.

*NEMA Standard 11-15-1991*

## SECTION 2
## Manufacturing standards

### 2.1 MATERIALS

Cable tray systems shall be made of either corrosion-resistant metal or metal with a corrosion-resistant finish.

*NEMA Standard 11-15-1984*

Aluminum and stainless steel alloys are inherently corrosion-resistant and no finish coating is required in most environments.

*Authorized Engineering Information 11-15-1984*

### 2.2 FINISHES

2.2.1 Carbon steel used for cable trays shall be protected against corrosion by one of the following processes:

A. Hot-dip mill galvanized in accordance with ASTM Publication No. A525 G90 Coating.*

*NEMA Standard 11-15-1984*

*Coating designation G90 of ASTM 525 has an average zinc coating weight of 1.25 oz. per square foot (0.381 kg/m2) of steel total coating on both surfaces (1.06 mils or 0.027mm) average thickness per side).

Hot-dip mill galvanized coatings are produced by continuous rolling steel sheets or strips in coils through a bath of molten zinc. The process involves pretreating the steel to make the surface react readily with molten zinc as the strip moves through the bath at high speeds. During fabrication where slitting, forming, cutting, or welding is performed, the cut edges and heat-affected zone of welding are subject to superficial oxidation. These areas are then protected through electrolytic action of the adjacent zinc surfaces. The coating is smooth, ductile, and adherent.

*Authorized Engineering Information 11-15-1984.*

B. Hot-dip galvanized after fabrication in accordance with ASTM Publication No. A123. Class B2. It is important to specify ASTM A525 or ASTM A123 to insure the specific coating is furnished.

*NEMA Standard 11-15-1991*

Class B2 of ASTM A123 has an average zinc coating weight of 1.50 oz. per square foot (0.46 kg/ $m^2$) (2.55 mils or 0.064mm ) average thickness per side).

Fabricated products which are hot-dip galvanized are thoroughly cleaned, fluxed, and immersed into a bath of molten zinc where they react to form a metallurgically bonded zinc coating. Normal oxidation of the galvanized surfaces will, in a short period of time, appear as a dull gray or white coating. Some degree of roughness and variations of thickness can be expected due to the hot dipping process. Because the galvanizing process takes place at the low end of the stress-relieving temperature range, some stress relief occurs and some distortion or warping may result.

*Authorized Engineering information 11-15-1991*

C. Other equivalent commercially available coatings.

*NEMA Standard 11-15-1991*

**2.2.2** Steel nuts and bolts shall be protected against corrosion by one of the following processes:

A. ASTM Publication No. B633
B. ASTM Publication No. B766
C. Other equivalent commercially available coatings.

*NEMA Standard 11-15-1991*

**2.2.3** Where metallic cable tray is intended for installation in highly corrosive environments, including most alkaline and acidic conditions, further protection against corrosion shall be provided by one of the following processes:

A. PVC (Polyvinylchloride) – A PVC coating shall be applied in a fluidized bed or by electrostatic spray. The coating thickness shall be 15 mils (0.381mm) ± 5 mils (±0.127mm).
Items to be protected shall be thoroughly cleaned, primed, and then coated with a fine grain UV (ultraviolet) stabilized vinyl plastic powder.
All field cuts and damaged areas of coated tray shall be repaired with a compatible PVC compound to ensure a coating integrity.

*NEMA Standard 11-15-1984.*

A PVC coating is generally applied to bare steel cable tray but can also be applied in aluminum cable tray. PVC is not recommended as a coating on galvanized steel cable trays because of rough surfaces and gas emissions which cause voids and adhesion problems.

*Authorized Engineering information 11-15-1984.*

B. Other equivalent commercially available coatings.

*NEMA Standard 11-15-1984.*

## 2.3 DIMENSIONS

### 2.3.1 General

Plus or minus values stated reflect the range of nominal dimensions in cable tray designs and are not intended to represent manufacturing tolerances.

*Authorized Engineering information 11-15-1984.*

### 2.3.2 Ladder Trays

1. **Lengths of Straight Sections** – 12' (3660mm) ±3/16" (4.76mm) and 24' (7320mm) ±5/16" (7.94mm), not including connectors if attached.
2. **Widths** – 6", 12", 18", 24", 30", and 36" (152mm, 305mm, 457mm, 610mm, 762mm and 914mm), ±1/4" (6.35mm) inside dimension.

   Overall widths shall not exceed inside widths by more than 4" (102mm).
3. **Depths** – Inside depths shall be 3", 4", 5", and 6" (76.2mm, 102mm, 127.0mm, and 152mm), ±3/8" (9.53mm).

   Outside depths shall not exceed inside depths by more than 11/4" (31.7mm).
4. **Rung Spacing on Straight Sections** – 6", 9", 12", or 18" (152mm, 229mm, 305mm, or 457mm) on centers.
5. **Radius** – 12", 24", and 36" (305mm, 610mm, and 914mm).
6. **Degree of Arc for Elbows** – 30°, 45°, 60°, and 90°.

*NEMA Standard 11-15-1984*

### 2.3.3 Cable Trays (Trought Trays)

1. **Lengths of Straight Sections** – 12' (3660mm) ±3/16" (4.76mm) and 24' (7320mm) ±5/16" (7.94mm), not including connectors if attached.
2. **Widths** – 6", 12", 18", 24", 30", and 36" (152mm, 305mm, 457mm, 610mm, 762mm and 914mm), ±1/4" (6.35mm), inside dimension.

   Overall widths shall not exceed inside widths by more than 4" (102mm).
3. **Depths** – Inside depths shall be 3", 4", 5", and 6" (76.2mm, 102mm, 127mm, and 152mm), ±3/8" (9.53mm).

   Outside depths shall not exceed inside depths by more than 11/4" (31.7mm).
4. **Radius** – 12", 24", and 36" (305mm, 610mm, and 914mm).
5. **Degrees of Arc for Elbows** – 30°, 45°, 60°, and 90°.
6. **Transverse Elements** – The maximum open spacing between transverse elements shall be 4" (102mm) measured in a direction parallel to the tray side rails.

*NEMA Standard 11-15-1984*

### 2.3.4 Solid Bottom Trays

1. **Lengths of Straight Sections** – 12' (3660mm) ±3/16" (4.76mm) and 24' (7320mm) ±5/16" (7.94mm), not including connectors if attached.
2. **Widths** – 6", 12", 18", 24", 30", and 36" (152mm, 305mm, 457mm, 610mm, 762mm and 914mm) ±1/4" (6.35mm), inside dimension.

   Overall widths shall not exceed inside widths by more than 4" (102mm).
3. **Depths** – inside depths shall be 3", 4", 5", and 6" (76.2mm, 102mm, 127mm, and 152mm), ±3/8" (9.53mm).

   Outside depths shall not exceed inside depths by more than 11/4" (31.7mm).
4. **Radius** – 12", 24", and 36" (305mm, 610mm, and 914mm).
5. **Degree of Arc for Elbows** – 30°, 45°, 60°, and 90°.
6. **Bottom** – Bottom is solid.

*NEMA Standard 11-15-1984*

### 2.3.5 Channel Trays

1. **Lengths of Straight Sections** – 12' (3660mm) ±3/16" (4.76mm) and 24' (7320mm) ±5/16" (7.94mm), not including connectors if attached.
2. **Widths** – 3", 4", and 6" (76.2mm, 102mm, and 152mm), ±1/4" (6.35mm), inside dimension.
3. **Depths** –1-1/4" to 1-3/4" (31.7mm to 44.4mm) outside dimensions.
4. **Radius** – 12", 24", and 36" (305mm, 610mm, and 914mm).
5. **Degree of Arc for Elbows** – 30°, 45°, 60°, and 90°.

*NEMA Standard 11-15-1984.*

## 2.4 PROTECTION OF CABLE INSULATION

The inside of cable tray systems shall present no sharp edges, burrs, or projections which can damage cable insulation.

*NEMA Standard 7-14-1976.*

## 2.5 FITTINGS

The design and construction of fittings shall be based on the assumption that they will be supported in accordance with the recommendations given in 6.6 for support locations.

*NEMA Standard 11-15-1984.*

### 2.6 MARKING OF TRAYS WHEN USED AS EQUIPMENT GROUNDING CONDUCTORS

When steel or aluminum cable tray systems are used as equipment grounding conductors, cable tray sections and fittings shall be marked to show the minimum cross-sectional area in accordance with the Article 318 of the National Electrical Code.

*NEMA Standard 7-14-1976.*

## SECTION 3
## Performance Standards & Load/Span Class Designations

### 3.1 WORKING (ALLOWABLE) LOAD CAPACITY

The working (allowable) load capacity represents the ability of a cable tray to support the static weight of cables. It is equivalent to the destruction load capacity, as determined by testing in accordance with 4.1 divided by a safety factor of 1.5

*NEMA Standard 3-14-1979*

### 3.2 LOAD/SPAN CLASS DESIGNATIONS

There shall be three working load categories of cable tray:*

1. 50 lbs/linear ft. (74.4 kg/m) (Symbol A)
2. 75 lbs/linear ft. (111.6 kg/m) (Symbol B)
3. 100 lbs./linear ft. (148.8 kg/m) (Symbol C) and, four support span categories of:
1. 8' (2.44m)
2. 12' (3.66m)
3. 16' (4.87m)
4. 20' (6.09m)

Utilizing these, the load/span class designations of Table 3-1shall apply.

*NEMA Standard 3-14-1979*

**Table 3-1 LOAD/SPAN CLASS DESIGNATIONS**

| Working Lbs. | Load (kg/m) | Support Feet | Span (m) | Designation Per 3.1 |
|---|---|---|---|---|
| 50 | (74.4) | 8 | (2.44) | 8A |
| 75 | (111.6) | 8 | (2.44) | 8B |
| 100 | (148.8) | 8 | (2.44) | 8C |
| 50 | (74.4) | 12 | (3.66) | 12A |
| 75 | (111.6) | 12 | (3.66) | 12B |
| 100 | (148.8) | 12 | (3.66) | 12C |
| 50 | (74.4) | 16 | (4.87) | 16A |
| 75 | (111.6) | 16 | (4.87) | 16B |
| 100 | (148.8) | 16 | (4.87) | 16C |
| 50 | (74.4) | 20 | (6.09) | 20A |
| 75 | (111.6) | 20 | (6.09) | 20B |
| 100 | (148.8) | 20 | (6.09) | 20C |

NOTE 1- The above working loads are for cable only; when considering applications requiring concentrated static load, see 6.2.

NOTE 2 - These designations do not apply to channel tray, and the manufacturer should be consulted.

NOTE 3 - For deflection see 6.1.

*Authorized Engineering Information 11-15-1984.*

## SECTION 4
## Test Standards

### 4.1 DESTRUCTION LOAD TEST

#### 4.1.1 Test Specimen

For each design of cable tray, two separate tests shall be made. An unspliced straight section of the widest width shall be used in each test.

For ladder type cable trays rung spacing shall be 12" on center.

Differences in gauge, height of side rails, rung or bottom to side rail connection, or the configuration of any part constitute a different design.

*NEMA Standard 11-15-1991*

#### 4.1.2 Type and Length of Span

Test spans shall be simple beam spans with free unrestrained ends. Trays shall not have side restraints. Span lengths shall be as specified ±11/2" (38.1mm).

*NEMA Standard 11-15-1984*

#### 4.1.3 Orientation of Specimens

Specimens shall be tested in a horizontal position. The total length of the test specimen shall be not more than the specified span length plus 20%. Any overhang shall be equal.

*NEMA Standard 11-15-1984*

#### 4.1.4 Supports

Each end of the specimen shall be supported by an 11/8" (28.6mm) wide by 3/4" (19.0mm) high steel bar(s) with a 120° "Vee" notch cut in its bottom to a depth of 3/16" (4.76mm). The "Vee" notch shall rest on a 1" (25.4mm) solid round steel bar which is welded at a maximum of 12" (305mm) on center to a firm steel base, or the specimen shall be supported directly on a 21/2" (63.5mm) maximum diameter round steel bar or heavy wall steel tube welded to a firm steel base.

*NEMA Standard 11-15-1984*

#### 4.1.5 Loading Material

Loading material shall be steel strips, lead ingots, or other loading material.
Steel strips shall have rounded or deburred edges, a maximum thickness of 1 8" (3.18mm), a width of 11 8" (28.6mm) to 2" (50.8mm), a maximum length of 4' (1,220mm).
Five lead ingots, each weighing approximately 5 pounds (2.26 kg), shall be interconnected across corners into a string of 5 ingots approximately 22" (559mm) long. Individual ingots are normally hexagonal, approximately 3" (76.2mm) in diameter, and 11 2" (38.1mm) deep.
Other loading material shall have a maximum weight of 10 pounds (4.53 kg), a maximum width of 5" (127mm), and a maximum length of 12" (305mm).

*NEMA Standard 11-15-1984*

### 4.1.6 Loading

All specimens shall be loaded to destruction. The load shall be applied in at least 10 increments which are approximately equal. Loading shall be uniformly distributed for the length and breadth of the specimen except that the loading material shall be not closer than 1 2" (12.7mm) nor further than 1" (25.4mm) from the innermost elements of the side rails. It shall be arranged across the tray with a minimum of 3 8" (9.53mm) between stacks so that the loading material does not bridge transversely. All loading material shall be placed between the supports without overhanging.
For loading weight in a ladder-type tray, it shall be permissible to cover the bottom of the tray between supports with a flat sheet of No. 9 gauge (3.8mm) flattened expanded material not more than 3' (910mm) long and with a wire hole size of 3 4" (19.0mm), or a flat sheet of No. 16 gauge (1.5mm) sheet steel not more than 3' (910mm) long. The expanded metal or sheet steel shall not be fastened to the tray and shall be no closer than 1 2" (12.7mm) to the side rails. The 3' (910mm) lengths shall not overlap. The weight of the expanded metal or sheet steel shall be added to the total weight of the loading material.

*NEMA Standard 11-15-1984*

### 4.1.7 Destruction Load Capacity

The total weight of the loading material on the cable tray at the time it is destroyed shall be considered to be the destruction load capacity of the cable tray.

*NEMA Standard 11-15-1984*

### 4.1.8 Interpolation & Extrapolation of Test Data

When allowable load and deflection data are determined by load tests, values for span lengths not tested shall be determined by interpolation from a curve based on values for a minimum of three tested span lengths. Extrapolation toward shorter span lengths is permissible but shall not be used for span lengths longer than the longest span length tested.

*NEMA Standard 11-15-1984*

## 4.2 DEFLECTION TEST

The vertical deflection of the tray shall be measured at two points along the line midway between the supports and at right angles to the longitudinal axis of the tray. The two points of measurement shall be at the midpoint of the span of each side rail.

The average of these two readings shall be considered to be the vertical direction of the tray.

For application information on deflection see 6.1.

*NEMA Standard 3-14-1979*

## 4.3 ELECTRICAL CONTINUITY OF CONNECTIONS

### 4.3.1 Test Specimen

Each specimen shall consist of two 24" (610mm) lengths of side rail plus mechanical connecting means.

*NEMA Standard 7-14-1976*

### 4.3.2 Resistance Test Procedure

Each specimen should be joined together, using the mechanical connector and following the instructions provided by the manufacturer.

*Authorized Engineering Information 7-14-1976.*

A current of 30 amperes shall be passed through the specimen and the resistance measured between two points 6" (152mm) on each side of the joint. The net resistance of the joint shall be not more than 0.00033 ohm as computed from the measured voltage drop and the current passing through the specimen.

*NEMA Standard 7-14-1976*

# SECTION 5
# specifications & Drawings

## 5.1 DATA TO APPEAR IN SPECIFICATIONS

The following statement and minimum data, when applicable, should appear in all cable tray specifications:

1. Cable tray shall be manufactured and installed in accordance with NEMA Standard VE 1-1991
2. Load/span class designation (see Section 3)
3. Type (see Section 1.2)
4. Material (see Section 2.1)
5. Finish (see Section 2.2)
6. Rung Spacing (see Section 2.3)
7. Inside depth (see Section 2.3)
8. Width (see Section 2.3)
9. Fitting Radius (see Section 2.3)
10. Accessories (see Section 1.2).

*Authorized Engineering Information 11-15-1991.*

## 5.2 DATA TO APPEAR ON DRAWINGS

The following minimum data should appear on all cable tray drawings:

1. Type (ladder, trough, etc.)
2. Width
3. Straight section, fitting, or accessory
4. Fitting radii
5. Elevation (bottom of tray)
6. Vertical and horizontal changes in direction
7. Clearances-vertical and horizontal
8. Number of trays
9. Supports
10. Show graphic scale

*Authorized Engineering Information 11-15-1991 .*

## SECTION 6
## Application Information

### 6.1 DEFLECTION

Under normal applications deflection limitations should not be included in design criteria for cable trays. However, if unusual or special conditions exist, the manufacturer should be consulted. Limitations of deflection for aesthetic purpose only can result in an over-designed tray system.

*Authorized Engineering Information 3-14-1979.*

### 6.2 CONCENTRATED STATIC LOAD
***(If Required by User)***

A concentrated static load is not included in Table 3-1, Load/Span Designations. Some user applications may require that a given concentrated static load be imposed over and above the working load.

Such a concentrated static load represents a static weight applied between the side rails at midspan. When so specified, the concentrated static load may be converted to an equivalent, uniform load (W e) in pounds per linear foot (kilograms per meter) using the formula:

$$W_e = \frac{2 \times (\text{Concentrated Static Load})}{\text{span length, ft. } (m)}$$

and added to the static weight of cables in the tray. This combined load may be used to select a suitable load/span designation (See Table 3-1). If the combined load exceeds the working load shown in Table 3-1, the manufacturer should be consulted.

*Authorized Engineering Information 11-15-1984.*

### 6.3 WARNING! WALKWAYS

Inasmuch as cable tray is designed as a support for power or control cables, or both, and is not intended or designed to be a walkway for personnel, the user is urged to display appropriate warnings cautioning against the use of this support as a walkway. The following language is suggested:

**Warning! Not to be used as a walkway,ladder or support for personnel. To be used only as a mechanical support for cables and tubing.**

*Authorized Engineering Information 3-14-1979.*

### 6.4 FITTINGS

Changes in direction should be mechanically continuous and accomplished by use of fittings having dimensions in accordance with 2.3.

*Authorized Engineering Information 3-14-1979.*

### 6.5 SUPPORTS

Supports for cable trays should provide a strength and working load capacity sufficient to meet the load requirement of the cable tray systems.

1. Horizontal and vertical tray supports should provide an adequate bearing surface for the tray and should have provisions for holddown clamps or fasteners.
2. In addition, vertical tray supports should provide secured means for fastening cable trays to supports.

*Authorized Engineering Information 3-14-1979*

### 6.6 SUPPORT LOCATIONS

#### 6.6.1 Horizontal Cable Tray Straight Sections

Horizontal cable tray straight sections should be supported at intervals not to exceed the support span for the appropriate NEMA Class Designation shown in Table 3-1. Unspliced straight sections should be used on all simple spans and on end spans of continuous span runs. A support should be located within 2' (610mm) of each side of an expansion connector. Straight section lengths should be equal to or greater than the span length to ensure not more than one splice between supports.

*Authorized Engineering Information 11-15-1991*

#### 6.6.2 Horizontal Cable Tray Fittings

1. Horizontal Elbow Supports (See Figure 6-1) Supports for horizontal tray fittings should be placed within 2' (610mm) of each fitting extremity, and as follows:
(a) 90° supports at the 45° point of arc.
(b) 60° supports at the 30° point of arc.
(c) 45° supports at the 221 2° point of arc (except for the 12" (305mm) radii).
(d) 30° supports at the 15° point of arc (except for the 12" (305mm) radii).
2. Horizontal Tee Supports (See Figure 6-2)-Within 2' (610mm) of each of the three openings connected to other cable tray items for the 12-inch (305mm) radius. On all other radii, at least one support should be placed under each side rail of the horizontal tee, preferably as shown in Figure 6-2.
3. Horizontal Cross Supports (See Figure 6- 3)-Within 2' (610mm) of each of the four openings connected to other cable tray items for the 12-inch (305mm) radius. On all other radii, at least one support should be placed under each side rail of the horizontal cross, preferably as shown in Figure 6-3.
4. Horizontal Wye Supports (See Figure 6-4)-Within 2' (610mm) of each of the three openings connected to other cable tray items, and at 221 2° point of the arc adjacent to the branch.
5. Reducer Supports (See Figures 6-5 and 6-6) Within 2' 610mm) of each fitting extremity.

*Authorized Engineering Information 11-15-1984.*

### 6.6.3 Vertical Cable Tray Elbows (See Figure 6-7)

Vertical cable tray elbows at the top of runs should be supported at each end. Vertical cable tray elbows at the bottom of runs should be supported at the top of the elbow, and within 2' (610mm) of the lower extremity of the elbow.
Authorized Engineering

*Authorized Engineering Information 11-15-1984.*

### 6.6.4 Vertical Cable Tray Tees (See Figure 6-8)

Vertical cable tray tees should be supported within 2' (610mm) of each fitting extremity.
Authorized

*Authorized Engineering Information 11-15-1984.*

### 6.6.5 Vertical Straight Sections

Vertical straight sections should be supported indoors at appropriate intervals permitted by the building structure; outdoor support intervals should be determined by wind loading. The maximum distance between vertical supports should not exceed 24' (7,320*mm*) on centers.

*Authorized Engineering Information 11-15-1984.*

### 6.6.6 Sloping Trays

Sloping trays should be supported at intervals not exceeding those for horizontal trays of the same design for the same installation.

*Authorized Engineering Information 11-15-1984.*

### 6.6.7 Fittings as End of Run

A fitting which is used as an end of the run dropout should have a support attached to it, firmly reinforcing the fitting.

*Authorized Engineering Information 11-15-1984.*

## 6.7 PROTECTION OF CABLE INSULATION

The inside of cable tray systems should present no sharp edges, burrs, or projections which could damage cable insulation.

*Authorized Engineering Information 3-14-1979.*

## 6.8 THERMAL CONTRACTION AND EXPANSION

It is important that thermal contraction and expansion be considered when installing cable tray systems. If it is determined that expansion connectors are required, reference should be made to Table 6-1 for maximum spacing.

The cable tray should be securely fixed at the support nearest to its midpoint between the expansion connectors and secured by expansion guides at all other support locations. The cable tray should be permitted longitudinal movement in both directions from that fixed point towards the expansion connectors.

Accurate gap setting at the time of installation is necessary for the proper operation of the expansion connectors. The following procedure should assist the installer in determining the correct gap:
Step 1 - Plot the highest expected cable tray metal temperature on the maximum temperature vertical axis.
Example's Value = 100°F. (See Figure 6-9).
Step 2 - Plot the lowest expected cable tray metal temperature on the minimum temperature vertical axis.
Example's Value = -28° F.
Step 3 - Draw a line between these maximum and minimum temperature points on the two vertical axis.
Step 4 - To determine the required expansion joint gap setting: Plot the cable tray metal temperature at the time of the cable tray installation on the Maximum temperature vertical axis. (Example's Value = 50° F).
Project over from the 50°F point on the maximum temperature vertical axis to an intersection with the line between the maximum and minimum cable tray metal temperatures. From this intersection point, project down to the gap setting horizontal axis to find the correct gap setting value (Example's Value: 3 8" gap setting). This is the length of the gap to be set between the cable tray sections at the expansion joint splice plate location.

*Authorized Engineering Information 11-15-1984*

**Table 6-1**
**MAXIMUM SPACING BETWEEN EXPANSION JOINTS THAT PROVIDE FOR 1" (25.4mm ) MOVEMENT**

| Temp. | Differential | Steel | | Aluminum | |
|---|---|---|---|---|---|
| F | ( C ) | Feet | (m) | Feet | (m) |
| 25 | (-4) | 512 | (156) | 260 | (79.2) |
| 50 | (10) | 256 | (78.0) | 130 | (39.6) |
| 75 | (24) | 171 | (52.1) | 87 | (26.5) |
| 100 | (38) | 128 | (39.0) | 65 | (19.8) |
| 125 | (51) | 102 | (3.11) | 52 | (15.8) |
| 150 | (65) | 85 | (25.9) | 43 | (13.1) |
| 175 | (79) | 73 | (22.2) | 37 | (11.3) |

## 6.9 CABLE INSTALLATION

When installing cable in cable tray, it is important that care and planning be exercised so that the cable or the cable tray is not damaged or destroyed. The cable manufacturer should be contacted for maximum pulling tensions and minimum bending radii, and advice on prevention of "egging" or deformation of cable jacketing or shielding.

*Authorized Engineering Information 11-15-1984.*

## Support Locations for Fittings

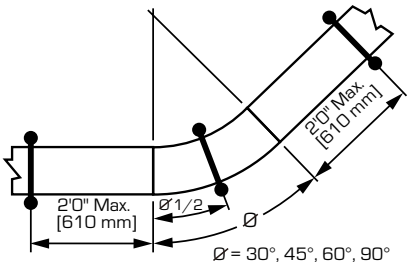


**Figure 6-1**
**HORIZONTAL ELBOWS**

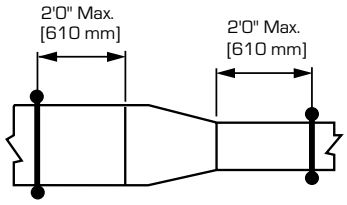


**Figure 6-5**
**STRAIGHT REDUCER**

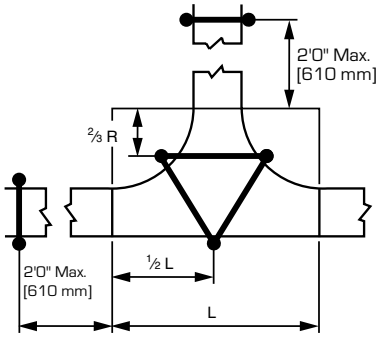


**Figure 6-2**
**HORIZONTAL TEE**

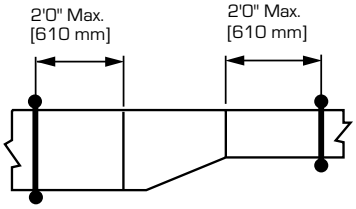


**Figure 6-6**
**OFFSET REDUCER**

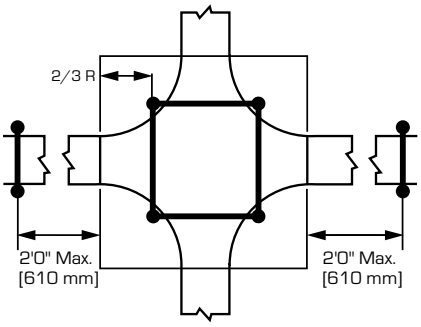


**Figure 6-3**
**HORIZONTAL CROSS**

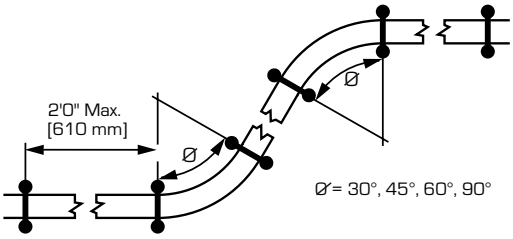


**Figure 6-7**
**VERTICAL ELBOWS**

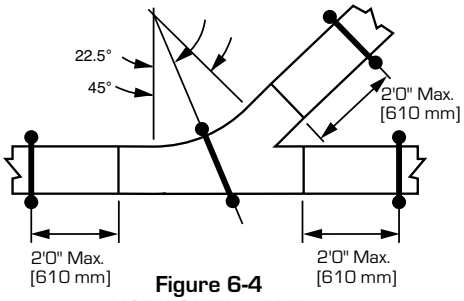


**Figure 6-4**
**HORIZONTAL WYE**

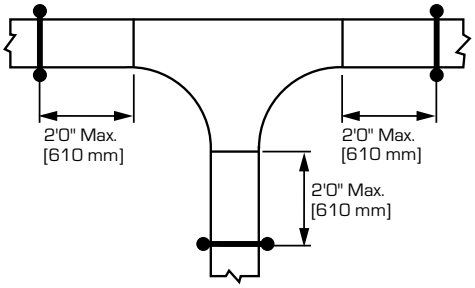


**Figure 6-8**
**VERTICAL TEE**

## GAP SETTINGS

Establish maximum and minimum temperatures in summer and winter for the area. Draw line connecting them. Using the metal temperature at time of installation (C° or F°) draw horizontal to temperature slope and plot straight down to find gap distance at expansion joint.



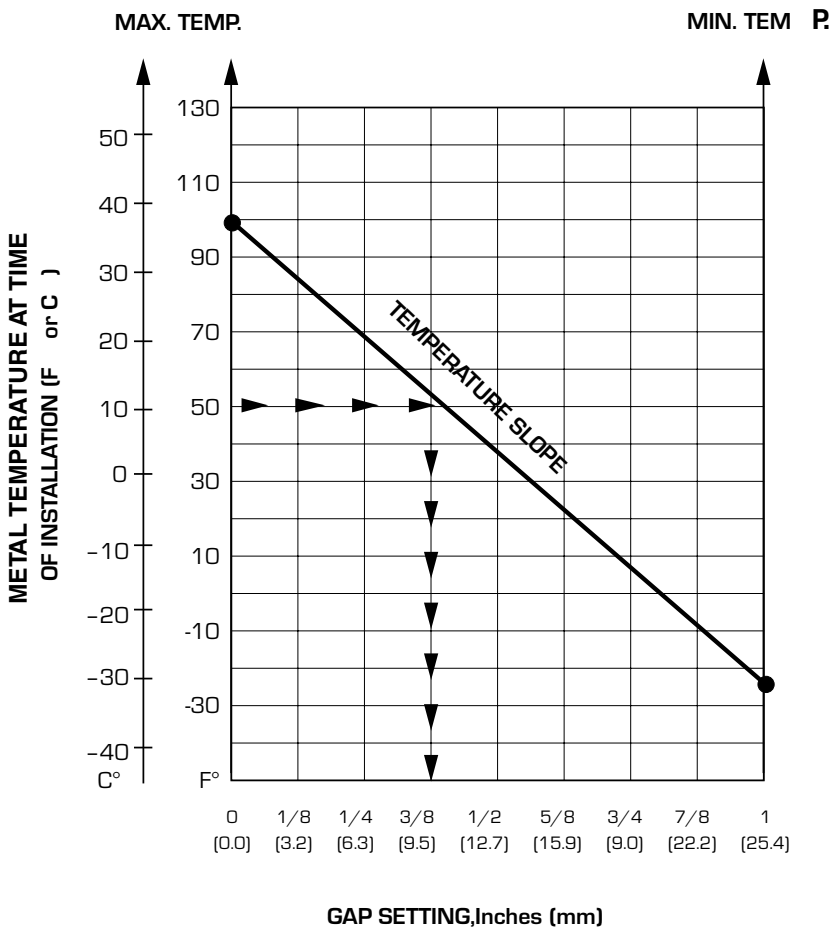


Figure 6-9

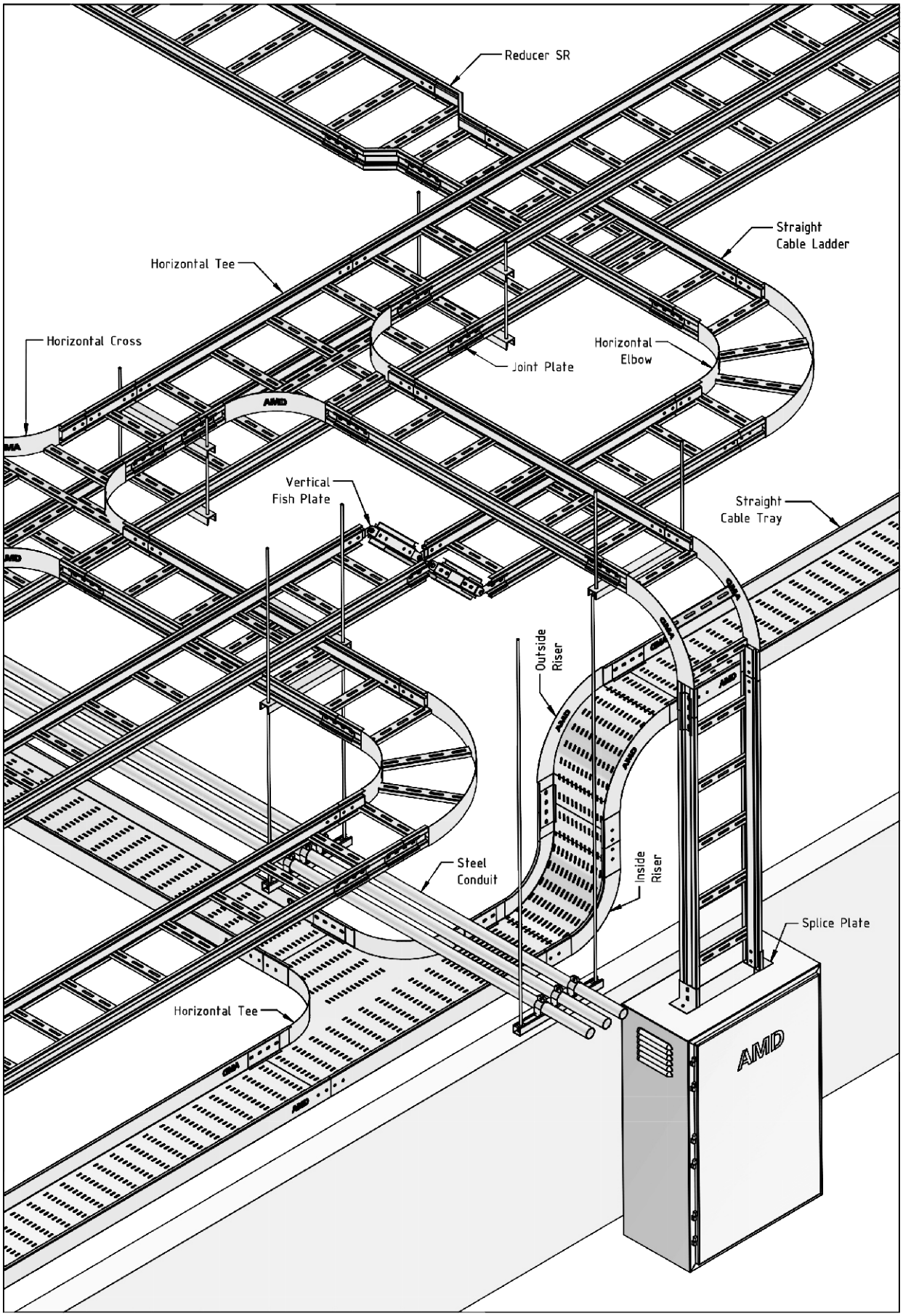
Reducer SR
Straight
Cable Ladder
Horizontal Tee
Horizontal Cross
Horizontal
Elbow
Joint Plate
Vertical
Fish Plate
Straight
Cable Tray
Outside
Riser
Inside
Riser
Steel
Conduit
Splice Plate
Horizontal Tee
AMD

## GUIDANCE MANUAL FOR THE PART NUMBER CODE

| Product | Type | Description | Material | Width | Height | Radius/Diameter |
|---|---|---|---|---|---|---|
| CT | U (Type "U") | ST (Straight) | P (Steel) | 50 = 05 | 50 = A | For Radius : |
| (Cable Tray) | | EL (Elbow) | | 100 = 10 | 100 = B | 300 = 30 |
| | C (Type "C") | TE (Tee) | S (Stainless Steel) | 150 = 15 | 75 = C | 450 = 45 |
| TR (Cable | | XR (Cross) | | 200 = 20 | 60 = D | 600 = 60 |
| Trunking) | W (Type "W") | OR (Outside Riser) | A (Aluminium) | 300 = 30 | 25 = E | 900 = 90 |
| | | IR (Inside Riser) | | 400 = 40 | 127 = F | |
| CD (Cable | H (Heavy Duty) | SR (Reducer), LR, RR | | 450 = 45 | 152 = G | For Diameter : |
| Duct) | | | | 600 = 60 | 200 = H | 3/8 = 38 |
| | I (Alm Type "I") | Cover | | 800 = 80 | 23 = I | 1/2 = 12 |
| CL (Cable | | SC (Straight Cover) | | | 41 = J | 3/4 = 34 |
| Ladder) | E (Alm Sigma) | EC (Elbow Cover) | | | | 1 = 10 |
| | | TC (Tee Cover) | | | | 1½ = 15 |
| CN | | XC (Cross Cover) | | | | 1¾ = 15 |
| (Channel) | | OC (Outside Cover) | | | | 2 = 20 |
| | | 1C (Inside Cover) | | | | 2½ = 25 |
| WM (Wire | | RC (Reducer Cover) | | | | 3 = 30 |
| Mesh) | | | | | | |
| | | Channel | | | | |
| MT | | AF (Angle Fitting) | | | | |
| ( Multitray) | | PF (Plate Fitting) | | | | |
| | | CO (Conduit Clamp) | | | | |
| AC | | | | | | |
| (Accessories) | | Accessories | | | | |
| | | JS (Jointing) | | | | |
| | | HF (Horizontal Fishplate) | | | | |
| | | VF (Vertical Fishplate) | | | | |
| | | HB (Hanger Beam) | | | | |
| | | BS (Bracket Support) | | | | |
| | | ES (End Stop) | | | | |
| | | SE (Separator) | | | | |
| | | FS (Splice Plate for Stand) | | | | |
| | | CA (Hold Down Clamp) | | | | |
| | | CI (Hold Down Clip) | | | | |
| | | CC (Cover Clamp Set) | | | | |
| | | ES (End Plate Set) | | | | |
| | | HR (Hanger Rod) | | | | |
| | | EB (Earth Bonding) | | | | |

## HOW TO READ THE PART NUMBER

1. For Cable Tray & Ladder, example : **CLUSTP10A**

**CL U ST P 10 A**

- A : indicate the height is 25 mm
- 10 : indicate the width is 100 mm
- P : indicate the material used is Steel
- ST : indicate the description for Straight
- U : indicate the products is U Type
- CL : indicate the products is Ladder

2. For Channel Type Straight, example : **CTSTP10H**

**CT ST P 41 H**

- H : indicate the height is 23 mm
- 10 : indicate the width is 100 mm
- P : indicate the material used is Steel
- ST : indicate the description for Straight
- CT : indicate the products is Channel

3. For Channel Type Straight, example **CPFS4090**

**CT PF S 40 90**

- 90 : indicate 2nd width is 90 mm
- 40 : indicate 1st width is 40 mm
- S : indicate the descreption for Straight
- PF : indicate the product is Plate Fitting Type
- CT : indicate the products is Channel

4. For Accessories, example : **ACBSP15**

**AC BS P 15**

- 15 : indicate the width is 150 mm
- P : indicate the material used is Steel
- BS : indicate the description is Bracket Support
- AC : indicate the products is Accessories

## Cable Tray Type U

Cable Tray Type U , U-Channel Cable Support, yaitu tray kabel berbentuk huruf U yang digunakan untuk penataan kabel ringan-sedang dalam sistem cable management.

### Keterangan Produk

| | |
|---|---|
| Nama Produk | Cable Tray Type U |
| Raw material | Steel , Stainless , Aluminium |
| Merek | AMD |
| Warna | Galvanized, Other |
| Standards | NEMA |
| Finishing | Electro Plating, Powder Coating<br>Hotdip Galvanized |

### Spesifikasi Produk

| | |
|---|---|
| Thickness | 1,2mm, 1,6mm, 1,8mm, 2mm |
| Height | 50mm, 75mm,100mm, 150mm |
| Depth | 48mm, 73mm, 98mm, 148mm |
| Lenght | 2400mm, 3000mm |

Other dimensions, thickness are available upon special requirements.

### Straight Cable Tray Type U

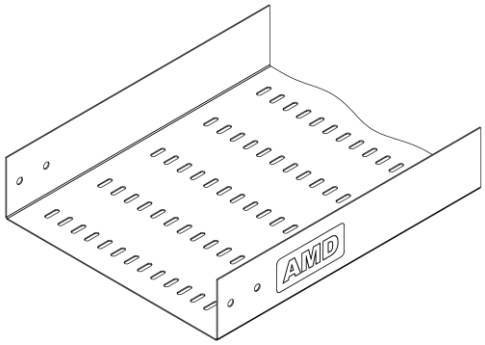


| PART NO. H50 | PART NO. H100 | WIDTH |
|---|---|---|
| CTUSTP05A | CTUSTP05B | 50 |
| CTUSTP10A | CTUSTP10B | 100 |
| CTUSTP15A | CTUSTP15B | 150 |
| CTUSTP20A | CTUSTP20B | 200 |
| CTUSTP25A | CTUSTP25B | 250 |
| CTUSTP30A | CTUSTP30B | 300 |
| CTUSTP40A | CTUSTP40B | 400 |
| CTUSTP50A | CTUSTP50B | 500 |
| CTUSTP60A | CTUSTP60B | 600 |
| CTUSTP80A | CTUSTP80B | 800 |

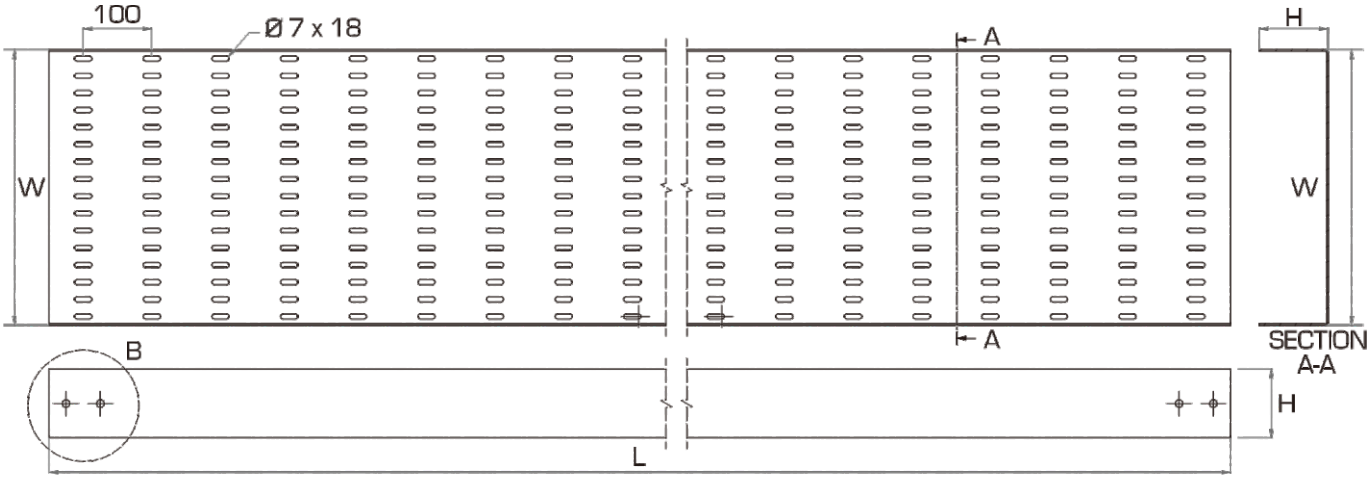


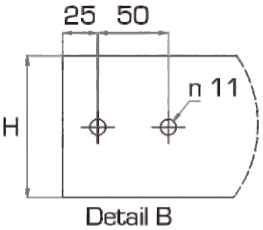

## Horizontal Elbow

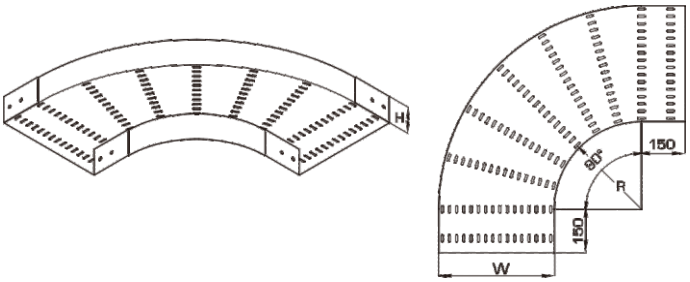


| PART NO. H50 | PART NO. H100 | WIDTH |
|---|---|---|
| CTUELP05A30 | CTUELP05B30 | 50 |
| CTUELP10A30 | CTUELP10B30 | 100 |
| CTUELP15A30 | CTUELP15B30 | 150 |
| CTUELP20A30 | CTUELP20B30 | 200 |
| CTUELP25A30 | CTUELP25B30 | 250 |
| CTUELP30A30 | CTUELP30B30 | 300 |
| CTUELP40A30 | CTUELP40B30 | 400 |
| CTUELP50A30 | CTUELP50B30 | 500 |
| CTUELP60A30 | CTUELP60B30 | 600 |
| CTUELP80A30 | CTUELP80B30 | 800 |

## Horizontal Tee

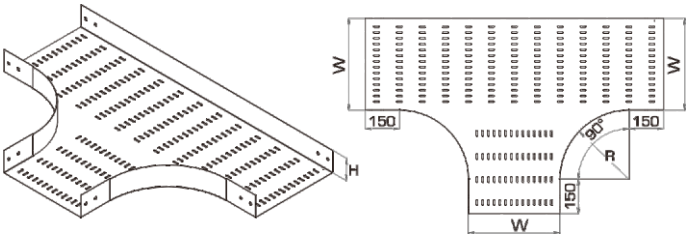


| PART NO. H50 | PART NO. H100 | WIDTH |
|---|---|---|
| CTUTEP05A30 | CTUTEP05B30 | 50 |
| CTUTEP10A30 | CTUTEP10B30 | 100 |
| CTUTEP15A30 | CTUTEP15B30 | 150 |
| CTUTEP20A30 | CTUTEP20B30 | 200 |
| CTUTEP25A30 | CTUTEP25B30 | 250 |
| CTUTEP30A30 | CTUTEP30B30 | 300 |
| CTUTEP40A30 | CTUTEP40B30 | 400 |
| CTUTEP50A30 | CTUTEP50B30 | 500 |
| CTUTEP60A30 | CTUTEP60B30 | 600 |
| CTUTEP80A30 | CTUTEP80B30 | 800 |

## Horizontal Cross

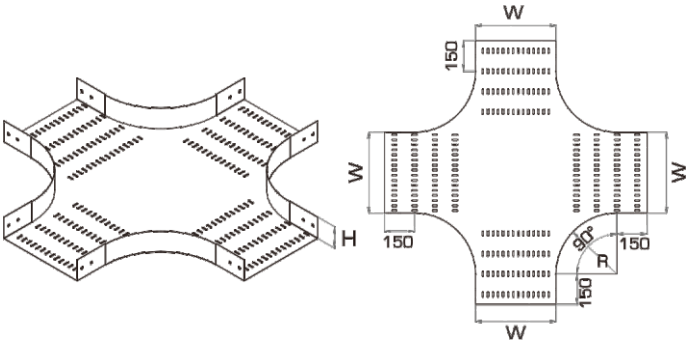


| PART NO. H50 | PART NO. H100 | WIDTH |
|---|---|---|
| CTUXRP05A30 | CTUXRP05A30 | 50 |
| CTUXRP10A30 | CTUXRP10B30 | 100 |
| CTUXRP15A30 | CTUXRP15B30 | 150 |
| CTUXRP20A30 | CTUXRP20B30 | 200 |
| CTUXRP25A30 | CTUXRP25B30 | 250 |
| CTUXRP30A30 | CTUXRP30B30 | 300 |
| CTUXRP40A30 | CTUXRP40B30 | 400 |
| CTUXRP50A30 | CTUXRP50B30 | 500 |
| CTUXRP60A30 | CTUXRP60B30 | 600 |
| CTUXRP80A30 | CTUXRP80B30 | 800 |

## Insert Riser

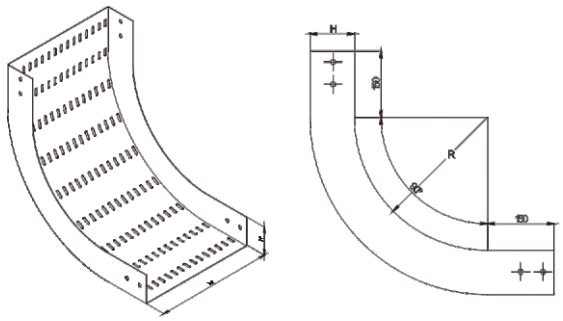


| PART NO. H50 | PART NO. H100 | WIDTH |
|---|---|---|
| CTUIRP05A30 | CTUIRP05B30 | 50 |
| CTUIRP10A30 | CTUIRP10B30 | 100 |
| CTUIRP15A30 | CTUIRP15B30 | 150 |
| CTUIRP20A30 | CTUIRP20B30 | 200 |
| CTUIRP25A30 | CTUIRP25B30 | 250 |
| CTUIRP30A30 | CTUIRP30B30 | 300 |
| CTUIRP40A30 | CTUIRP40B30 | 400 |
| CTUIRP50A30 | CTUIRP50B30 | 500 |
| CTUIRP60A30 | CTUIRP60B30 | 600 |
| CTUIRP80A30 | CTUIRP80B30 | 800 |

## Outset Riser

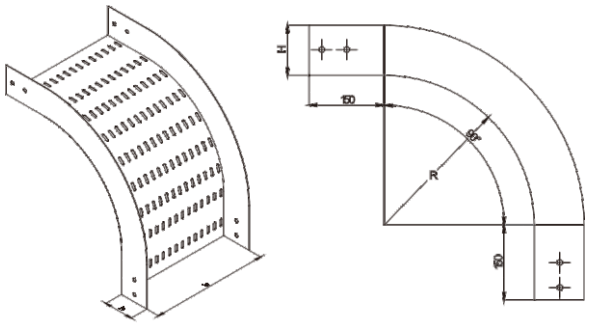


| PART NO. H50 | PART NO. H100 | WIDTH |
|---|---|---|
| CTUORP05A30 | CTUORP05B30 | 50 |
| CTUORP10A30 | CTUORP10B30 | 100 |
| CTUORP15A30 | CTUORP15B30 | 150 |
| CTUORP20A30 | CTUORP20B30 | 200 |
| CTUORP25A30 | CTUORP25B30 | 250 |
| CTUORP30A30 | CTUORP30B30 | 300 |
| CTUORP40A30 | CTUORP40B30 | 400 |
| CTUORP50A30 | CTUORP50B30 | 500 |
| CTUORP60A30 | CTUORP60B30 | 600 |
| CTUORP80A30 | CTUORP80B30 | 800 |

## Reduser

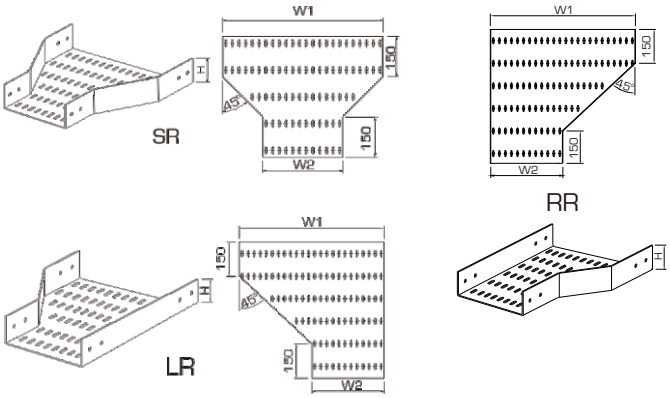


| PART NO. H50 | PART NO. H100 | WIDTH |
|---|---|---|
| CTUSRP05A30 | CTUSRP05B30 | 50 |
| CTUSRP10A30 | CTUSRP10B30 | 100 |
| CTUSRP15A30 | CTUSRP15B30 | 150 |
| CTUSRP20A30 | CTUSRP20B30 | 200 |
| CTUSRP25A30 | CTUSRP25B30 | 250 |
| CTUSRP30A30 | CTUSRP30B30 | 300 |
| CTUSRP40A30 | CTUSRP40B30 | 400 |
| CTUSRP50A30 | CTUSRP50B30 | 500 |
| CTUSRP60A30 | CTUSRP60B30 | 600 |
| CTUSRP80A30 | CTUSRP80B30 | 800 |

## Cable Tray Type C

Cable Tray Type C = C-Channel Cable Tray, yaitu tray dengan profil huruf C yang lebih kokoh dan digunakan untuk sistem penataan kabel listrik & telekomunikasi dengan perlindungan lebih baik daripada Type U.

### Keterangan Produk

| | |
|---|---|
| Nama Produk | Cable Tray Type C |
| Raw material | Steel , Stainless , Aluminium |
| Merek | AMD |
| Warna | Galvanized, Other |
| Standards | NEMA |
| Finishing | Electro Plating, Powder Coating<br>Hotdip Galvanized |

### Spesifikasi Produk

| | |
|---|---|
| Thickness | 1,2mm, 1,6mm, 1,8mm, 2mm |
| Height | 50mm, 75mm,100mm, 150mm |
| Depth | 48mm, 73mm, 98mm, 148mm |
| Lenght | 2400mm, 3000mm |

Other dimensions, thickness are available upon special requirements.

### Straight Cable Tray Type C

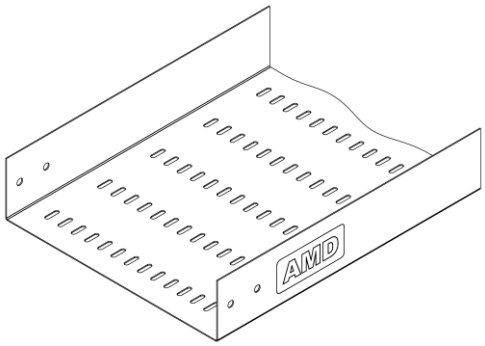


| PART NO. H50 | PART NO. H100 | WIDTH |
|---|---|---|
| CTCSTP05A | CTCSTP05B | 50 |
| CTCSTP10A | CTCSTP10B | 100 |
| CTCSTP15A | CTCSTP15B | 150 |
| CTCSTP20A | CTCSTP20B | 200 |
| CTCSTP25A | CTCSTP25B | 250 |
| CTCSTP30A | CTCSTP30B | 300 |
| CTCSTP40A | CTCSTP40B | 400 |
| CTCSTP50A | CTCSTP50B | 500 |
| CTCSTP60A | CTCSTP60B | 600 |
| CTCSTP80A | CTCSTP80B | 800 |

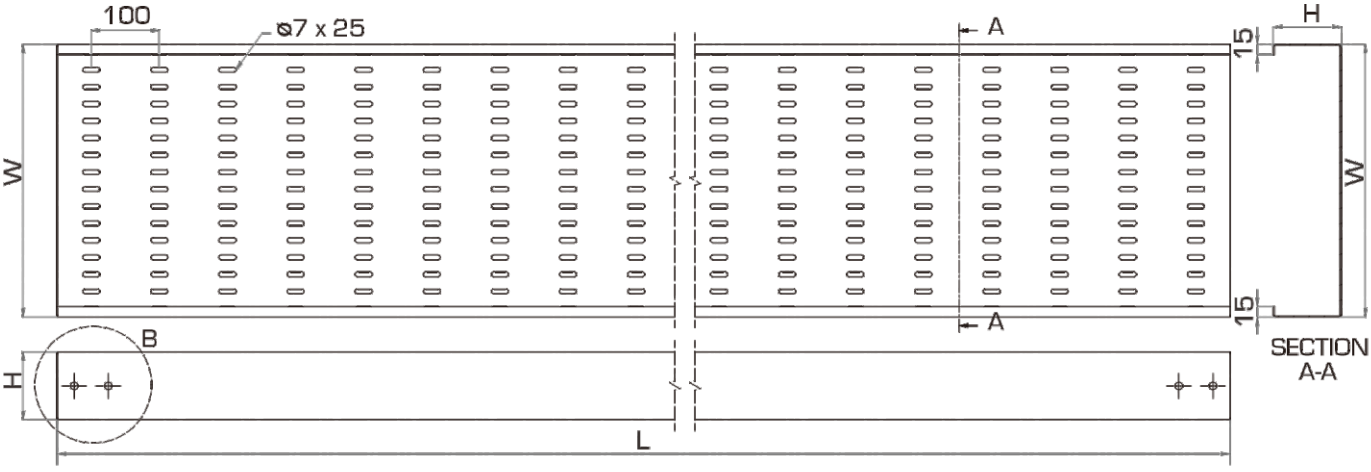


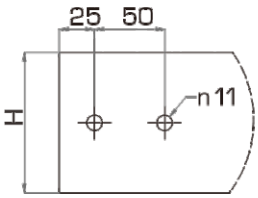


BETAIL B

## Horizontal Elbow

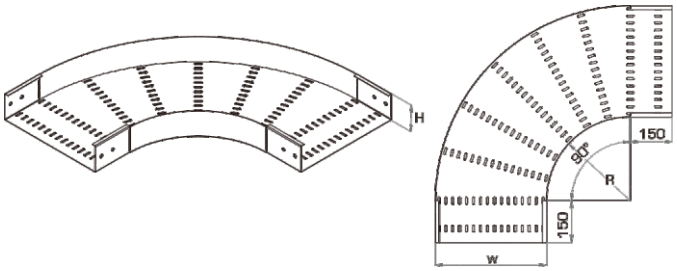


| PART NO. H50 | PART NO. H100 | WIDTH |
|---|---|---|
| STCELP05A30 | STCELP05B30 | 50 |
| STCELP10A30 | STCELP10B30 | 100 |
| STCELP15A30 | STCELP15B30 | 150 |
| STCELP20A30 | STCELP20B30 | 200 |
| STCELP25A30 | STCELP25B30 | 250 |
| STCELP30A30 | STCELP30B30 | 300 |
| STCELP40A30 | STCELP40B30 | 400 |
| STCELP50A30 | STCELP50B30 | 500 |
| STCELP60A30 | STCELP60B30 | 600 |
| STCELP80A30 | STCELP80B30 | 800 |

## Horizontal Tee

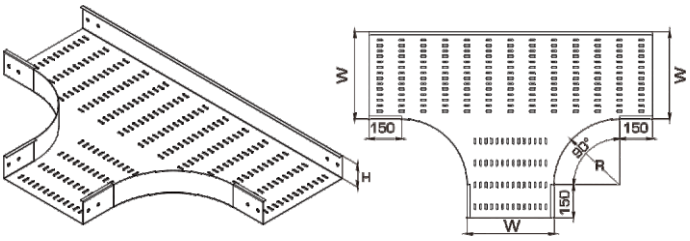


| PART NO. H50 | PART NO. H100 | WIDTH |
|---|---|---|
| STCTEP05A30 | STCTEP05B30 | 50 |
| STCTEP10A30 | STCTEP10B30 | 100 |
| STCTEP15A30 | STCTEP15B30 | 150 |
| STCTEP20A30 | STCTEP20B30 | 200 |
| STCTEP25A30 | STCTEP25B30 | 250 |
| STCTEP30A30 | STCTEP30B30 | 300 |
| STCTEP40A30 | STCTEP40B30 | 400 |
| STCTEP50A30 | STCTEP50B30 | 500 |
| STCTEP60A30 | STCTEP60B30 | 600 |
| STCTEP80A30 | STCTEP80B30 | 800 |

## Horizontal Cross

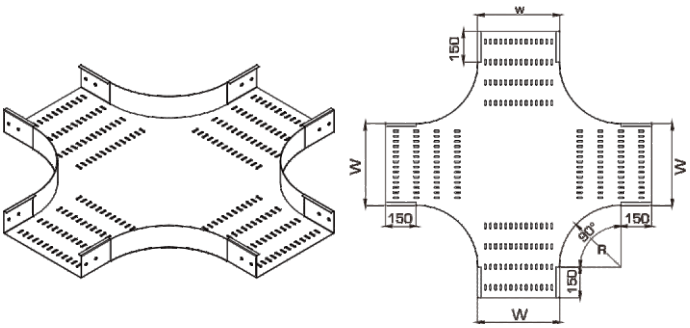


| PART NO. H50 | PART NO. H100 | WIDTH |
|---|---|---|
| STCXRP05A30 | STCXRP05B30 | 50 |
| STCXRP10A30 | STCXRP10B30 | 100 |
| STCXRP15A30 | STCXRP15B30 | 150 |
| STCXRP20A30 | STCXRP20B30 | 200 |
| STCXRP25A30 | STCXRP25B30 | 250 |
| STCXRP30A30 | STCXRP30B30 | 300 |
| STCXRP40A30 | STCXRP40B30 | 400 |
| STCXRP50A30 | STCXRP50B30 | 500 |
| STCXRP60A30 | STCXRP60B30 | 600 |
| STCXRP80A30 | STCXRP80B30 | 800 |

## Insert Riser

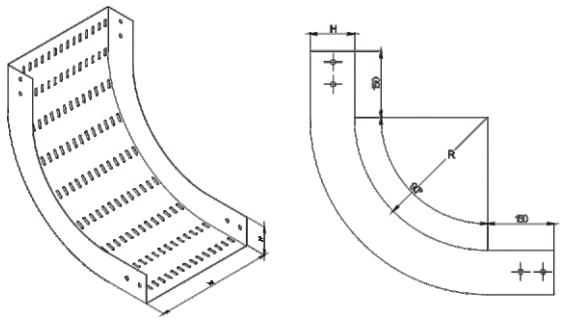


| PART NO. H50 | PART NO. H100 | WIDTH |
|---|---|---|
| CTCIRP05A30 | CTCIRP05B30 | 50 |
| CTCIRP10A30 | CTCIRP10B30 | 100 |
| CTCIRP15A30 | CTCIRP15B30 | 150 |
| CTCIRP20A30 | CTCIRP20B30 | 200 |
| CTCIRP25A30 | CTCIRP25B30 | 250 |
| CTCIRP30A30 | CTCIRP30B30 | 300 |
| CTCIRP40A30 | CTCIRP40B30 | 400 |
| CTCIRP50A30 | CTCIRP50B30 | 500 |
| CTCIRP60A30 | CTCIRP60B30 | 600 |
| CTCIRP80A30 | CTCIRP80B30 | 800 |

## Outset Riser

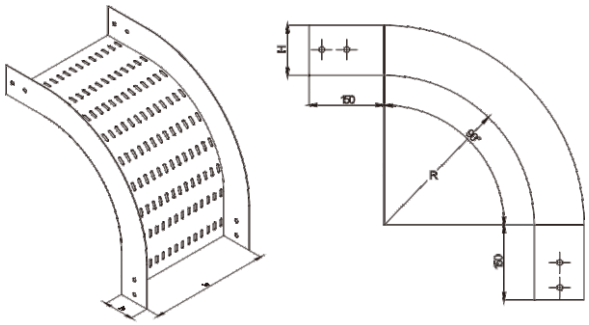


| PART NO. H50 | PART NO. H100 | WIDTH |
|---|---|---|
| CTCORP05A30 | CTCORP05B30 | 50 |
| CTCORP10A30 | CTCORP10B30 | 100 |
| CTCORP15A30 | CTCORP15B30 | 150 |
| CTCORP20A30 | CTCORP20B30 | 200 |
| CTCORP25A30 | CTCORP25B30 | 250 |
| CTCORP30A30 | CTCORP30B30 | 300 |
| CTCORP40A30 | CTCORP40B30 | 400 |
| CTCORP50A30 | CTCORP50B30 | 500 |
| CTCORP60A30 | CTCORP60B30 | 600 |
| CTCORP80A30 | CTCORP80B30 | 800 |

## Reduser

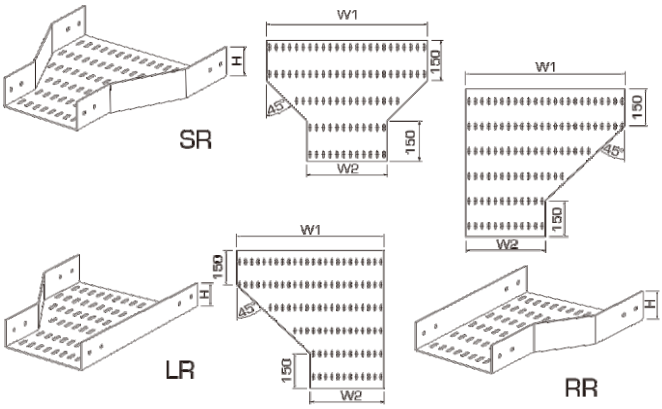


| PART NO. H50 | PART NO. H100 | WIDTH |
|---|---|---|
| CTCSRP05A30 | CTCSRP05B30 | 50 |
| CTCSRP10A30 | CTCSRP10B30 | 100 |
| CTCSRP15A30 | CTCSRP15B30 | 150 |
| CTCSRP20A30 | CTCSRP20B30 | 200 |
| CTCSRP25A30 | CTCSRP25B30 | 250 |
| CTCSRP30A30 | CTCSRP30B30 | 300 |
| CTCSRP40A30 | CTCSRP40B30 | 400 |
| CTCSRP50A30 | CTCSRP50B30 | 500 |
| CTCSRP60A30 | CTCSRP60B30 | 600 |
| CTCSRP80A30 | CTCSRP80B30 | 800 |

## Cable Trunking

Cable trunking adalah sistem wadah atau saluran tertutup yang dirancang untuk melindungi, menata, dan mengatur jalur kabel listrik maupun kabel komunikasi dalam suatu instalasi. Trunking umumnya terbuat dari bahan PVC, metal (galvanis, baja, aluminium), atau stainless steel, dengan berbagai ukuran yang disesuaikan dengan kebutuhan kapasitas kabel.

### Keterangan Produk

| | |
|---|---|
| Nama Produk | Cable Trunking |
| Raw material | Steel , Stainless , Aluminium |
| Merek | AMD |
| Warna | Galvanized, Other |
| Standards | NEMA |
| Finishing | Electro Plating, Powder Coating<br>Hotdip Galvanized |

### Spesifikasi Produk

| | |
|---|---|
| Thickness | 1,2mm, 1,6mm, 1,8mm, 2mm |
| Height | 50mm, 75mm,100mm, 150mm |
| Depth | 48mm, 73mm, 98mm, 148mm |
| Lenght | 2400mm, 3000mm |

Other dimensions, thickness are available upon special requirements.

### Straight Cable Trunking

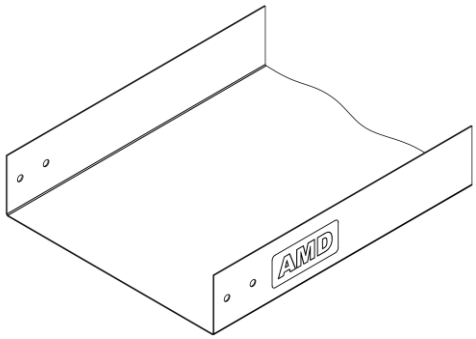


| PART NO. H50 | PART NO. H100 | WIDTH |
|---|---|---|
| TRSTP05A | TRSTP05B | 50 |
| TRSTP10A | TRSTP10B | 100 |
| TRSTP15A | TRSTP15B | 150 |
| TRSTP20A | TRSTP20B | 200 |
| TRSTP25A | TRSTP25B | 250 |
| TRSTP30A | TRSTP30B | 300 |
| TRSTP40A | TRSTP40B | 400 |
| TRSTP50A | TRSTP50B | 500 |
| TRSTP60A | TRSTP60B | 600 |
| TRSTP80A | TRSTP80B | 800 |

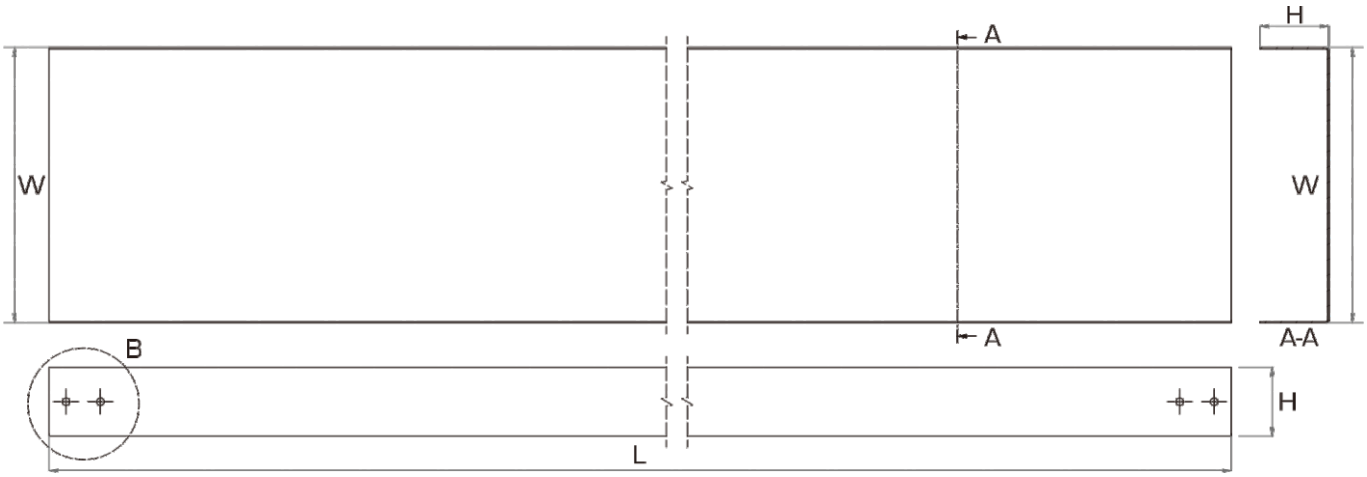


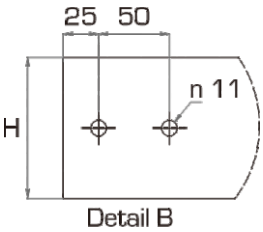

## Horizontal Elbow

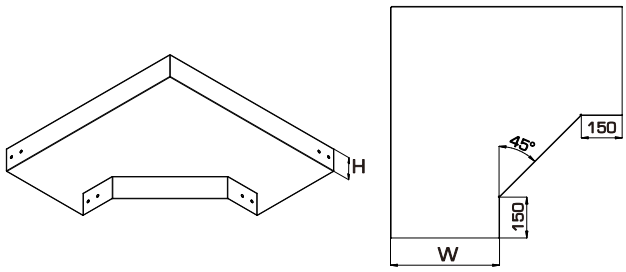


| PART NO. H50 | PART NO. H100 | WIDTH |
|---|---|---|
| TRELP05A30 | TRELP05B30 | 50 |
| TRELP10A30 | TRELP10B30 | 100 |
| TRELP15A30 | TRELP15B30 | 150 |
| TRELP20A30 | TRELP20B30 | 200 |
| TRELP25A30 | TRELP25B30 | 250 |
| TRELP30A30 | TRELP30B30 | 300 |
| TRELP40A30 | TRELP40B30 | 400 |
| TRELP50A30 | TRELP50B30 | 500 |
| TRELP60A30 | TRELP60B30 | 600 |
| TRELP80A30 | TRELP80B30 | 800 |

## Horizontal Tee

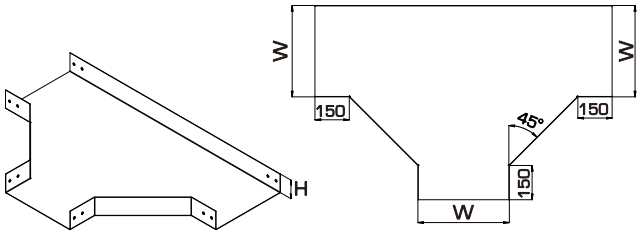


| PART NO. H50 | PART NO. H100 | WIDTH |
|---|---|---|
| TRTEP05A30 | TRTEP05B30 | 50 |
| TRTEP10A30 | TRTEP10B30 | 100 |
| TRTEP15A30 | TRTEP15B30 | 150 |
| TRTEP20A30 | TRTEP20B30 | 200 |
| TRTEP25A30 | TRTEP25B30 | 250 |
| TRTEP30A30 | TRTEP30B30 | 300 |
| TRTEP40A30 | TRTEP40B30 | 400 |
| TRTEP50A30 | TRTEP50B30 | 500 |
| TRTEP60A30 | TRTEP60B30 | 600 |
| TRTEP80A30 | TRTEP80B30 | 800 |

## Horizontal Cross

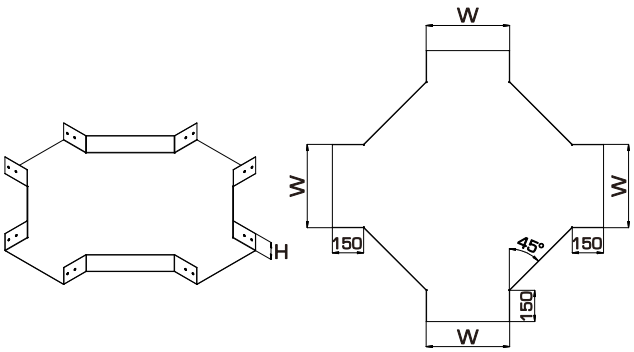


| PART NO. H50 | PART NO. H100 | WIDTH |
|---|---|---|
| TRXRP05A30 | TRXRP05B30 | 50 |
| TRXRP10A30 | TRXRP10B30 | 100 |
| TRXRP15A30 | TRXRP15B30 | 150 |
| TRXRP20A30 | TRXRP20B30 | 200 |
| TRXRP25A30 | TRXRP25B30 | 250 |
| TRXRP30A30 | TRXRP30B30 | 300 |
| TRXRP40A30 | TRXRP40B30 | 400 |
| TRXRP50A30 | TRXRP50B30 | 500 |
| TRXRP60A30 | TRXRP60B30 | 600 |
| TRXRP80A30 | TRXRP80B30 | 800 |

## Insert Riser

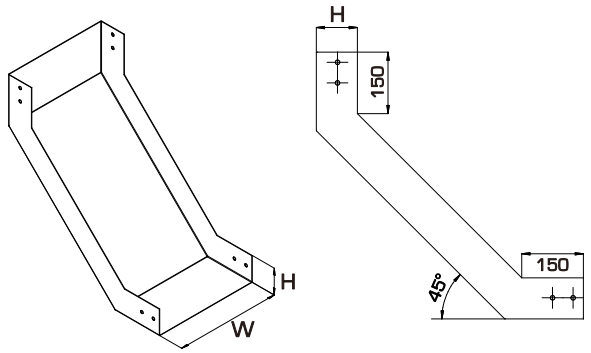


| PART NO. H50 | PART NO. H100 | WIDTH |
|---|---|---|
| TRIRP05A30 | TRIRP05B30 | 50 |
| TRIRP10A30 | TRIRP10B30 | 100 |
| TRIRP15A30 | TRIRP15B30 | 150 |
| TRIRP20A30 | TRIRP20B30 | 200 |
| TRIRP25A30 | TRIRP25B30 | 250 |
| TRIRP30A30 | TRIRP30B30 | 300 |
| TRIRP40A30 | TRIRP40B30 | 400 |
| TRIRP50A30 | TRIRP50B30 | 500 |
| TRIRP60A30 | TRIRP60B30 | 600 |
| TRIRP80A30 | TRIRP80B30 | 800 |

## Outset Riser

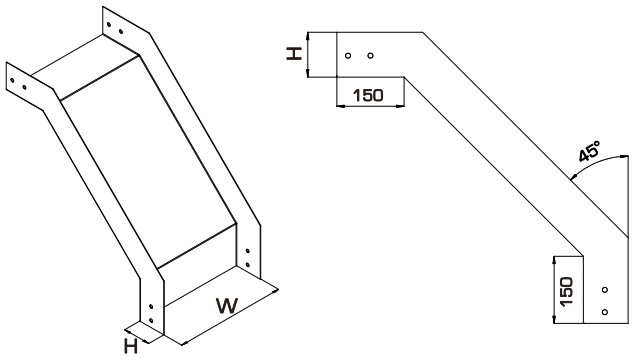


| PART NO. H50 | PART NO. H100 | WIDTH |
|---|---|---|
| TRORP05A30 | TRORP05B30 | 50 |
| TRORP10A30 | TRORP10B30 | 100 |
| TRORP15A30 | TRORP15B30 | 150 |
| TRORP20A30 | TRORP20B30 | 200 |
| TRORP25A30 | TRORP25B30 | 250 |
| TRORP30A30 | TRORP30B30 | 300 |
| TRORP40A30 | TRORP40B30 | 400 |
| TRORP50A30 | TRORP50B30 | 500 |
| TRORP60A30 | TRORP60B30 | 600 |
| TRORP80A30 | TRORP80B30 | 800 |

## Reduser

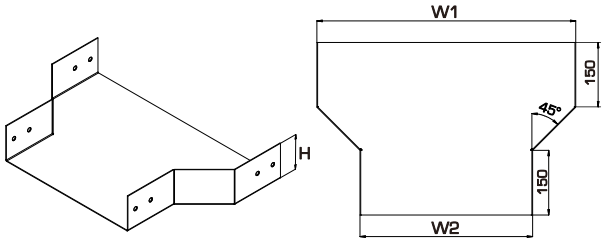


| PART NO. H50 | PART NO. H100 | WIDTH |
|---|---|---|
| TRSRP05A30 | TRSRP05B30 | 50 |
| TRSRP10A30 | TRSRP10B30 | 100 |
| TRSRP15A30 | TRSRP15B30 | 150 |
| TRSRP20A30 | TRSRP20B30 | 200 |
| TRSRP25A30 | TRSRP25B30 | 250 |
| TRSRP30A30 | TRSRP30B30 | 300 |
| TRSRP40A30 | TRSRP40B30 | 400 |
| TRSRP50A30 | TRSRP50B30 | 500 |
| TRSRP60A30 | TRSRP60B30 | 600 |
| TRSRP80A30 | TRSRP80B30 | 800 |

## Cable Duct

Cable duct adalah saluran atau pipa pelindung kabel yang dirancang untuk menyalurkan, melindungi, dan mengamankan instalasi kabel listrik maupun kabel data. Cable duct terbuat dari bahan PVC, metal (galvanis, baja, aluminium), atau stainless steel, dengan berbagai ukuran yang disesuaikan dengan kebutuhan kapasitas kabel.

### Keterangan Produk

| | |
|---|---|
| Nama Produk | Cable Duct |
| Raw material | Steel , Stainless , Aluminium |
| Merek | AMD |
| Warna | Galvanized, Other |
| Standards | NEMA |
| Finishing | Electro Plating, Powder Coating<br>Hotdip Galvanized |

### Spesifikasi Produk

| | |
|---|---|
| Thickness | 1,2mm, 1,6mm, 1,8mm, 2mm |
| Height | 50mm, 75mm,100mm, 150mm |
| Depth | 48mm, 73mm, 98mm, 148mm |
| Lenght | 2400mm, 3000mm |

Other dimensions, thickness are available upon special requirements.

### Straight Cable Duct

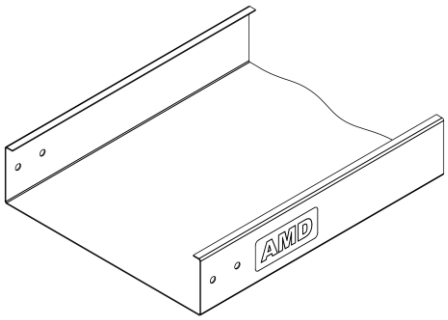


| PART NO. H50 | PART NO. H100 | WIDTH |
|---|---|---|
| CDSTP05A | CDSTP05B | 50 |
| CDSTP10A | CDSTP10B | 100 |
| CDSTP15A | CDSTP15B | 150 |
| CDSTP20A | CDSTP20B | 200 |
| CDSTP25A | CDSTP25B | 250 |
| CDSTP30A | CDSTP30B | 300 |
| CDSTP40A | CDSTP40B | 400 |
| CDSTP50A | CDSTP50B | 500 |
| CDSTP60A | CDSTP60B | 600 |
| CDSTP80A | CDSTP80B | 800 |

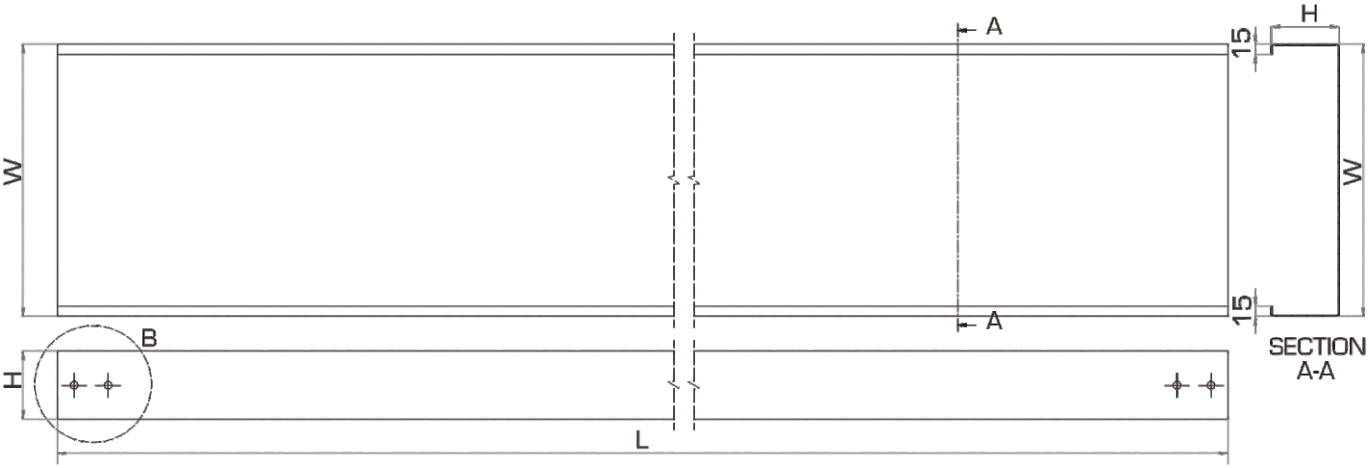


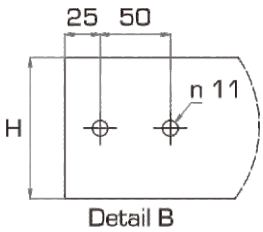

## Horizontal Elbow

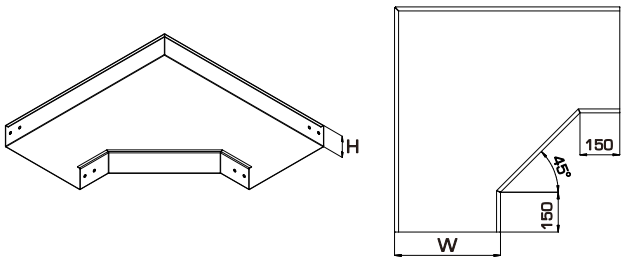


| PART NO. H50 | PART NO. H100 | WIDTH |
|---|---|---|
| CDELP05A30 | CDELP05B30 | 50 |
| CDELP10A30 | CDELP10B30 | 100 |
| CDELP15A30 | CDELP15B30 | 150 |
| CDELP20A30 | CDELP20B30 | 200 |
| CDELP25A30 | CDELP25B30 | 250 |
| CDELP30A30 | CDELP30B30 | 300 |
| CDELP40A30 | CDELP40B30 | 400 |
| CDELP50A30 | CDELP50B30 | 500 |
| CDELP60A30 | CDELP60B30 | 600 |
| CDELP80A30 | CDELP80B30 | 800 |

## Horizontal Tee

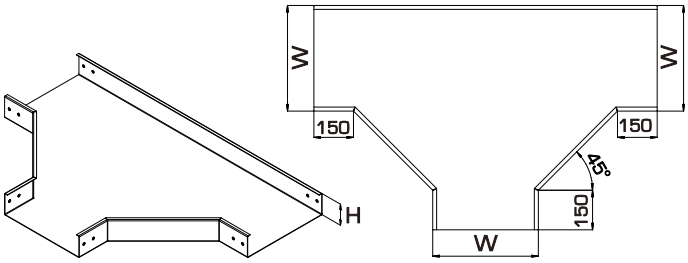


| PART NO. H50 | PART NO. H100 | WIDTH |
|---|---|---|
| CATEP05A30 | CBTEP05B30 | 50 |
| CATEP10A30 | CBTEP10B30 | 100 |
| CATEP15A30 | CBTEP15B30 | 150 |
| CATEP20A30 | CBTEP20B30 | 200 |
| CATEP25A30 | CBTEP25B30 | 250 |
| CATEP30A30 | CBTEP30B30 | 300 |
| CATEP40A30 | CBTEP40B30 | 400 |
| CATEP50A30 | CBTEP50B30 | 500 |
| CATEP60A30 | CBTEP60B30 | 600 |
| CATEP80A30 | CBTEP80B30 | 800 |

## Horizontal Cross

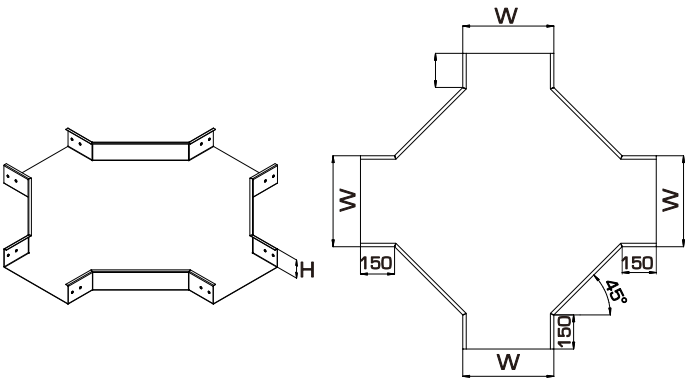


| PART NO. H50 | PART NO. H100 | WIDTH |
|---|---|---|
| CAXRP05A30 | CBXRP05B30 | 50 |
| CAXRP10A30 | CBXRP10B30 | 100 |
| CAXRP15A30 | CBXRP15B30 | 150 |
| CAXRP20A30 | CBXRP20B30 | 200 |
| CAXRP25A30 | CBXRP25B30 | 250 |
| CAXRP30A30 | CBXRP30B30 | 300 |
| CAXRP40A30 | CBXRP40B30 | 400 |
| CAXRP50A30 | CBXRP50B30 | 500 |
| CAXRP60A30 | CBXRP60B30 | 600 |
| CAXRP80A30 | CBXRP80B30 | 800 |

## Insert Riser

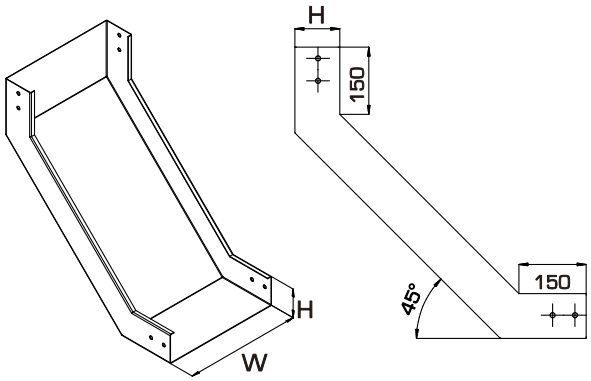


| PART NO. H50 | PART NO. H100 | WIDTH |
|---|---|---|
| CDIRP05A30 | CDIRP05B30 | 50 |
| CDIRP10A30 | CDIRP10B30 | 100 |
| CDIRP15A30 | CDIRP15B30 | 150 |
| CDIRP20A30 | CDIRP20B30 | 200 |
| CDIRP25A30 | CDIRP25B30 | 250 |
| CDIRP30A30 | CDIRP30B30 | 300 |
| CDIRP40A30 | CDIRP40B30 | 400 |
| CDIRP50A30 | CDIRP50B30 | 500 |
| CDIRP60A30 | CDIRP60B30 | 600 |
| CDIRP80A30 | CDIRP80B30 | 800 |

## Outset Riser

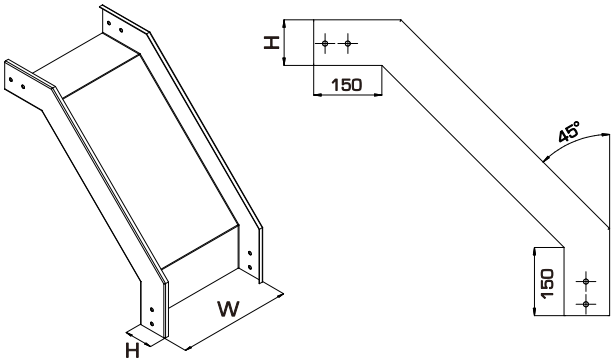


| PART NO. H50 | PART NO. H100 | WIDTH |
|---|---|---|
| CDORP05A30 | CDORP05B30 | 50 |
| CDORP10A30 | CDORP10B30 | 100 |
| CDORP15A30 | CDORP15B30 | 150 |
| CDORP20A30 | CDORP20B30 | 200 |
| CDORP25A30 | CDORP25B30 | 250 |
| CDORP30A30 | CDORP30B30 | 300 |
| CDORP40A30 | CDORP40B30 | 400 |
| CDORP50A30 | CDORP50B30 | 500 |
| CDORP60A30 | CDORP60B30 | 600 |
| CDORP80A30 | CDORP80B30 | 800 |

## Reduser

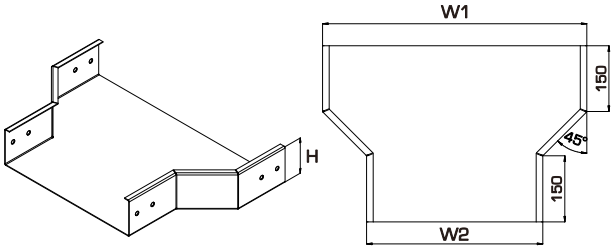


| PART NO. H50 | PART NO. H100 | WIDTH |
|---|---|---|
| CDSRP05A30 | CDSRP05B30 | 50 |
| CDSRP10A30 | CDSRP10B30 | 100 |
| CDSRP15A30 | CDSRP15B30 | 150 |
| CDSRP20A30 | CDSRP20B30 | 200 |
| CDSRP25A30 | CDSRP25B30 | 250 |
| CDSRP30A30 | CDSRP30B30 | 300 |
| CDSRP40A30 | CDSRP40B30 | 400 |
| CDSRP50A30 | CDSRP50B30 | 500 |
| CDSRP60A30 | CDSRP60B30 | 600 |
| CDSRP80A30 | CDSRP80B30 | 800 |

## Cable Ladder Type U

Cable Ladder Type U adalah sistem penyangga kabel berbentuk tangga dengan profil samping menyerupai huruf “U”, dirancang untuk mendukung instalasi kabel dalam jumlah besar pada area industri maupun komersial. Struktur tipe U memiliki side rail berbentuk kanal U yang memberikan kekuatan optimal sekaligus mempermudah pemasangan aksesoris.

### Keterangan Produk

| | |
|---|---|
| Nama Produk | Cable Ladder Type U |
| Raw material | Steel , Stainless , Aluminium |
| Merek | AMD |
| Warna | Galvanized, Other |
| Standards | NEMA |
| Finishing | Electro Plating, Powder Coating<br>Hotdip Galvanized |

### Spesifikasi Produk

| | |
|---|---|
| Thickness | 1,2mm, 1,6mm, 1,8mm, 2mm |
| Height | 50mm, 75mm,100mm, 150mm |
| Depth | 48mm, 73mm, 98mm, 148mm |
| Lenght | 2400mm, 3000mm |

Other dimensions, thickness are available upon special requirements.

### Straight Cable Ladder Type U

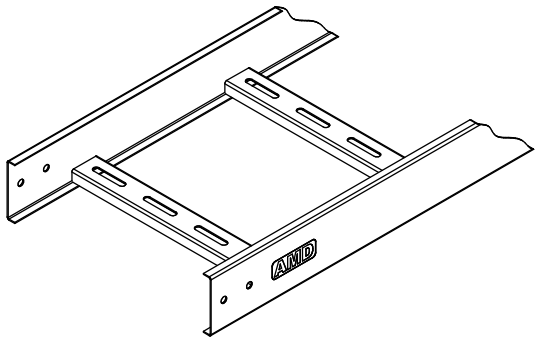


| PART NO. H50 | PART NO. H100 | WIDTH |
|---|---|---|
| CLUSTP05A | CLUSTP05B | 50 |
| CLUSTP10A | CLUSTP10B | 100 |
| CLUSTP15A | CLUSTP15B | 150 |
| CLUSTP20A | CLUSTP20B | 200 |
| CLUSTP25A | CLUSTP25B | 250 |
| CLUSTP30A | CLUSTP30B | 300 |
| CLUSTP40A | CLUSTP40B | 400 |
| CLUSTP50A | CLUSTP50B | 500 |
| CLUSTP60A | CLUSTP60B | 600 |
| CLUSTP80A | CLUSTP80B | 800 |

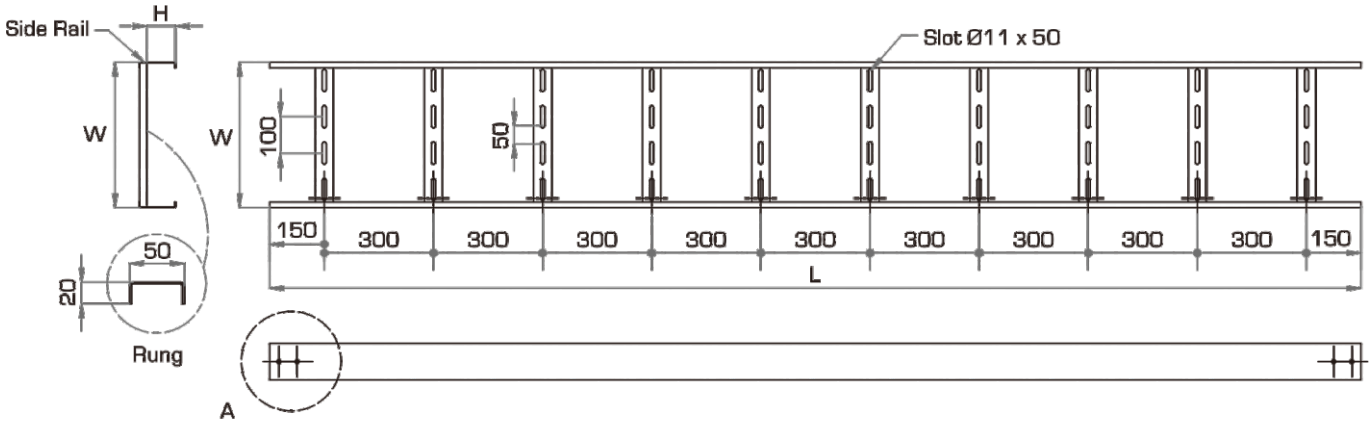


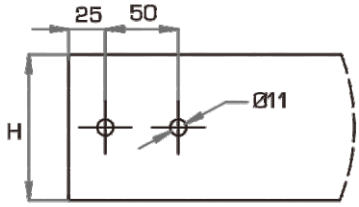


DETAIL A

## Horizontal Elbow

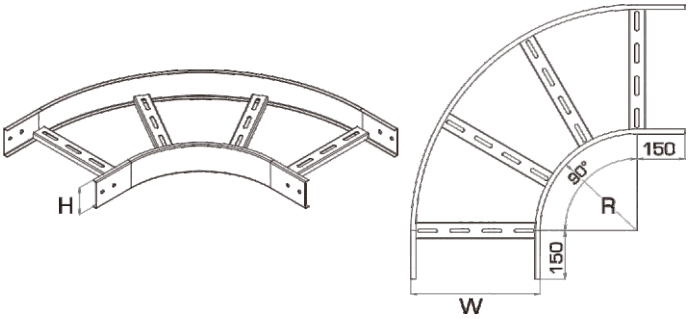


| PART NO. H50 | PART NO. H100 | WIDTH |
|---|---|---|
| CLUELP05A30 | CLUELP05B30 | 50 |
| CLUELP10A30 | CLUELP10B30 | 100 |
| CLUELP15A30 | CLUELP15B30 | 150 |
| CLUELP20A30 | CLUELP20B30 | 200 |
| CLUELP25A30 | CLUELP25B30 | 250 |
| CLUELP30A30 | CLUELP30B30 | 300 |
| CLUELP40A30 | CLUELP40B30 | 400 |
| CLUELP50A30 | CLUELP50B30 | 500 |
| CLUELP60A30 | CLUELP60B30 | 600 |
| CLUELP80A30 | CLUELP80B30 | 800 |

## Horizontal Tee

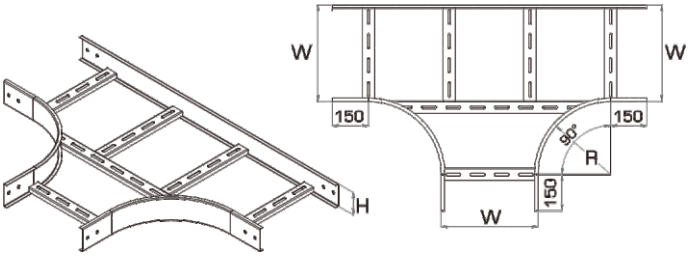


| PART NO. H50 | PART NO. H100 | WIDTH |
|---|---|---|
| CLUTEP05A30 | CLUTEP05B30 | 50 |
| CLUTEP10A30 | CLUTEP10B30 | 100 |
| CLUTEP15A30 | CLUTEP15B30 | 150 |
| CLUTEP20A30 | CLUTEP20B30 | 200 |
| CLUTEP25A30 | CLUTEP25B30 | 250 |
| CLUTEP30A30 | CLUTEP30B30 | 300 |
| CLUTEP40A30 | CLUTEP40B30 | 400 |
| CLUTEP50A30 | CLUTEP50B30 | 500 |
| CLUTEP60A30 | CLUTEP60B30 | 600 |
| CLUTEP80A30 | CLUTEP80B30 | 800 |

## Horizontal Cross

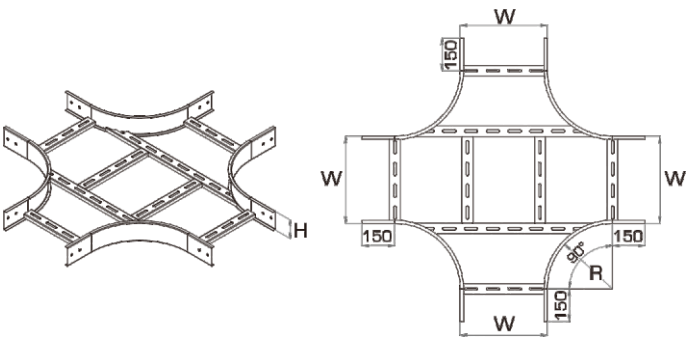


| PART NO. H50 | PART NO. H100 | WIDTH |
|---|---|---|
| CLUXRP05A30 | CLUXRP05B30 | 50 |
| CLUXRP10A30 | CLUXRP10B30 | 100 |
| CLUXRP15A30 | CLUXRP15B30 | 150 |
| CLUXRP20A30 | CLUXRP20B30 | 200 |
| CLUXRP25A30 | CLUXRP25B30 | 250 |
| CLUXRP30A30 | CLUXRP30B30 | 300 |
| CLUXRP40A30 | CLUXRP40B30 | 400 |
| CLUXRP50A30 | CLUXRP50B30 | 500 |
| CLUXRP60A30 | CLUXRP60B30 | 600 |
| CLUXRP80A30 | CLUXRP80B30 | 800 |

## Insert Riser

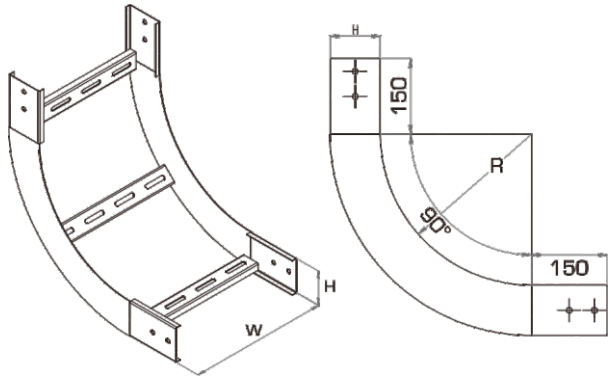


| PART NO. H50 | PART NO. H100 | WIDTH |
|---|---|---|
| CLUIRP05A30 | CLUIRP05B30 | 50 |
| CLUIRP10A30 | CLUIRP10B30 | 100 |
| CLUIRP15A30 | CLUIRP15B30 | 150 |
| CLUIRP20A30 | CLUIRP20B30 | 200 |
| CLUIRP25A30 | CLUIRP25B30 | 250 |
| CLUIRP30A30 | CLUIRP30B30 | 300 |
| CLUIRP40A30 | CLUIRP40B30 | 400 |
| CLUIRP50A30 | CLUIRP50B30 | 500 |
| CLUIRP60A30 | CLUIRP60B30 | 600 |
| CLUIRP80A30 | CLUIRP80B30 | 800 |

## Outset Riser

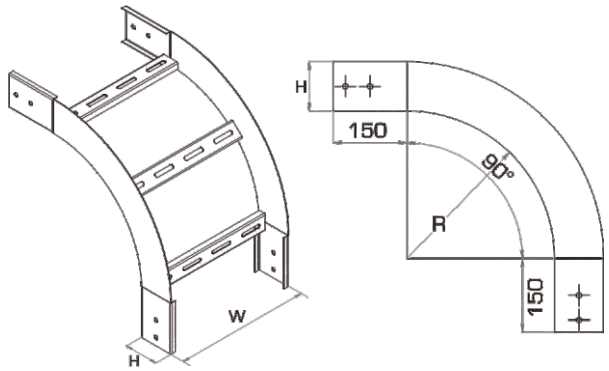


| PART NO. H50 | PART NO. H100 | WIDTH |
|---|---|---|
| CLUIRP05A30 | CLUIRP05B30 | 50 |
| CLUIRP10A30 | CLUIRP10B30 | 100 |
| CLUIRP15A30 | CLUIRP15B30 | 150 |
| CLUIRP20A30 | CLUIRP20B30 | 200 |
| CLUIRP25A30 | CLUIRP25B30 | 250 |
| CLUIRP30A30 | CLUIRP30B30 | 300 |
| CLUIRP40A30 | CLUIRP40B30 | 400 |
| CLUIRP50A30 | CLUIRP50B30 | 500 |
| CLUIRP60A30 | CLUIRP60B30 | 600 |
| CLUIRP80A30 | CLUIRP80B30 | 800 |

## Reduser

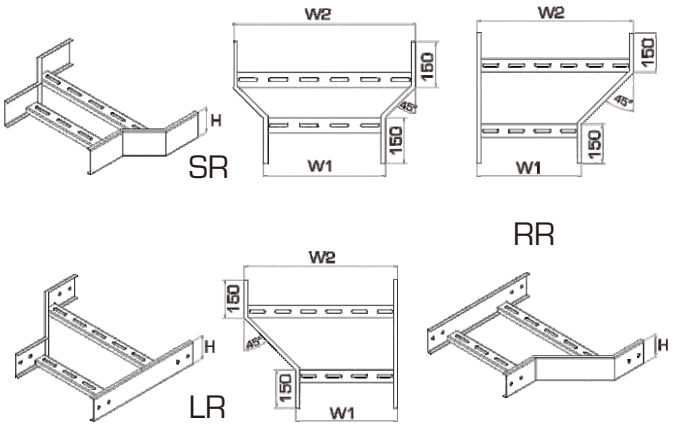


| PART NO. H50 | PART NO. H100 | WIDTH |
|---|---|---|
| CLUSRP05A30 | CLUSRP05B30 | 50 |
| CLUSRP10A30 | CLUSRP10B30 | 100 |
| CLUSRP15A30 | CLUSRP15B30 | 150 |
| CLUSRP20A30 | CLUSRP20B30 | 200 |
| CLUSRP25A30 | CLUSRP25B30 | 250 |
| CLUSRP30A30 | CLUSRP30B30 | 300 |
| CLUSRP40A30 | CLUSRP40B30 | 400 |
| CLUSRP50A30 | CLUSRP50B30 | 500 |
| CLUSRP60A30 | CLUSRP60B30 | 600 |
| CLUSRP80A30 | CLUSRP80B30 | 800 |

### Cable Ladder Type W

Cable Ladder Type W adalah sistem penyangga kabel berbentuk tangga dengan profil samping menyerupai huruf "W" yang dirancang untuk memberikan kekuatan struktural lebih tinggi dibanding tipe lain. Desain side rail berbentuk W-Channel menghasilkan struktur yang kokoh, stabil, dan mampu menahan beban kabel berat pada bentang panjang.

## Keterangan Produk

| | |
|---|---|
| Nama Produk | Cable Ladder Type W |
| Raw material | Steel , Stainless , Aluminium |
| Merek | AMD |
| Warna | Galvanized, Other |
| Standards | NEMA |
| Finishing | Electro Plating, Powder Coating<br>Hotdip Galvanized |

## Spesifikasi Produk

| | |
|---|---|
| Thickness | 1,2mm, 1,6mm, 1,8mm, 2mm |
| Height | 50mm, 75mm,100mm, 150mm |
| Depth | 48mm, 73mm, 98mm, 148mm |
| Lenght | 2400mm, 3000mm |

Other dimensions, thickness are available upon special requirements.

### Straight Cable Ladder Type W

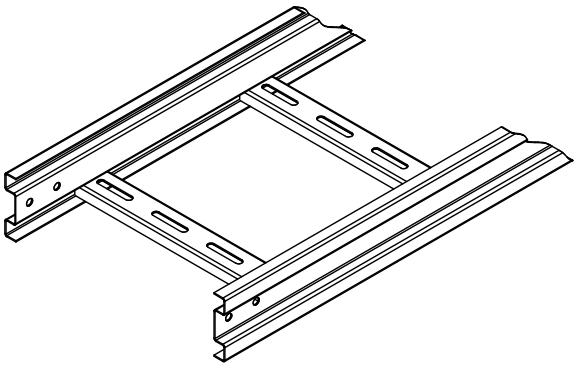

| PART NO. H50 | PART NO. H100 | WIDTH |
|---|---|---|
| CLWSTP05A | CLWSTP05B | 50 |
| CLWSTP10A | CLWSTP10B | 100 |
| CLWSTP15A | CLWSTP15B | 150 |
| CLWSTP20A | CLWSTP20B | 200 |
| CLWSTP25A | CLWSTP25B | 250 |
| CLWSTP30A | CLWSTP30B | 300 |
| CLWSTP40A | CLWSTP40B | 400 |
| CLWSTP50A | CLWSTP50B | 500 |
| CLWSTP60A | CLWSTP60B | 600 |
| CLWSTP80A | CLWSTP80B | 800 |

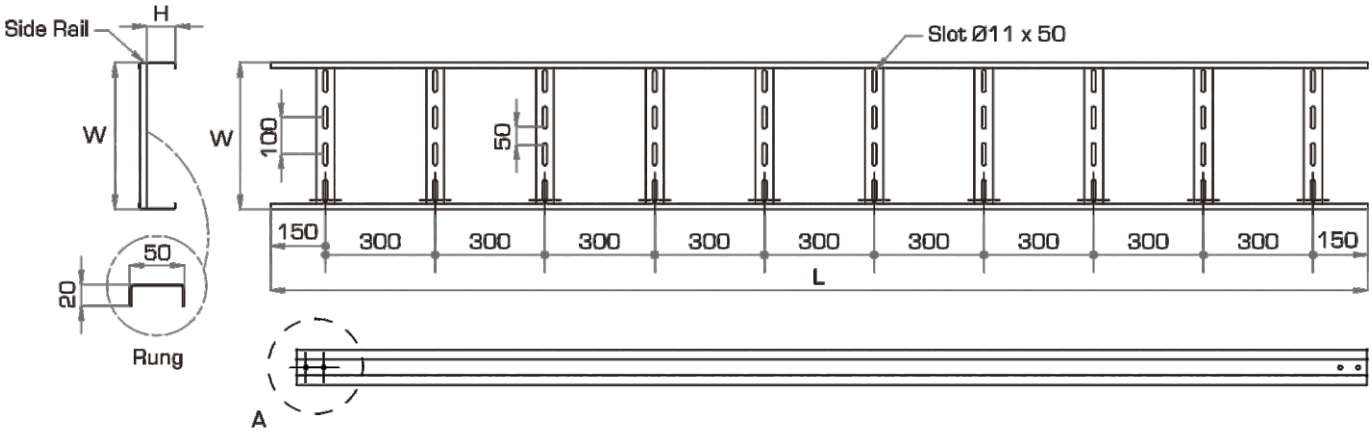


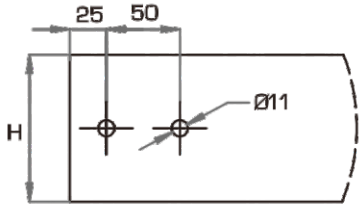


Detail "A"

## Horizontal Elbow

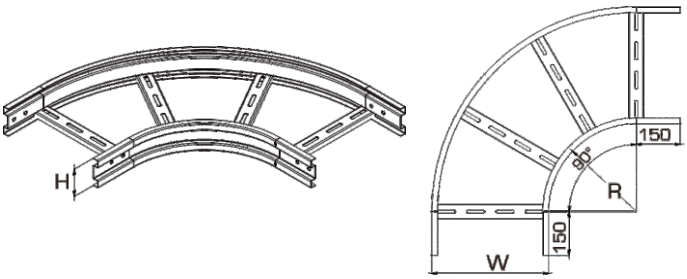


| PART NO. H50 | PART NO. H100 | WIDTH |
|---|---|---|
| CLWELP05A30 | CLWELP05B30 | 50 |
| CLWELP10A30 | CLWELP10B30 | 100 |
| CLWELP15A30 | CLWELP15B30 | 150 |
| CLWELP20A30 | CLWELP20B30 | 200 |
| CLWELP25A30 | CLWELP25B30 | 250 |
| CLWELP30A30 | CLWELP30B30 | 300 |
| CLWELP40A30 | CLWELP40B30 | 400 |
| CLWELP50A30 | CLWELP50B30 | 500 |
| CLWELP60A30 | CLWELP60B30 | 600 |
| CLWELP80A30 | CLWELP80B30 | 800 |

## Horizontal Tee

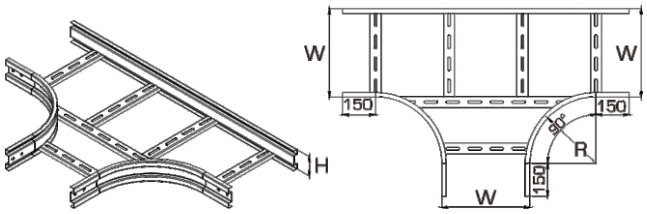


| PART NO. H50 | PART NO. H100 | WIDTH |
|---|---|---|
| CLWTEP05A30 | CLWTEP05B30 | 50 |
| CLWTEP10A30 | CLWTEP10B30 | 100 |
| CLWTEP15A30 | CLWTEP15B30 | 150 |
| CLWTEP20A30 | CLWTEP20B30 | 200 |
| CLWTEP25A30 | CLWTEP25B30 | 250 |
| CLWTEP30A30 | CLWTEP30B30 | 300 |
| CLWTEP40A30 | CLWTEP40B30 | 400 |
| CLWTEP50A30 | CLWTEP50B30 | 500 |
| CLWTEP60A30 | CLWTEP60B30 | 600 |
| CLWTEP80A30 | CLWTEP80B30 | 800 |

## Horizontal Cross

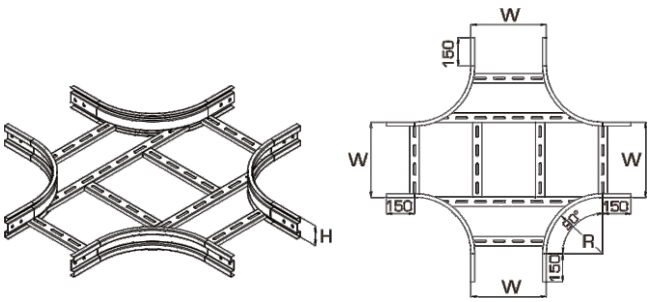


| PART NO. H50 | PART NO. H100 | WIDTH |
|---|---|---|
| CLWXRP05A30 | CLWXRP05B30 | 50 |
| CLWXRP10A30 | CLWXRP10B30 | 100 |
| CLWXRP15A30 | CLWXRP15B30 | 150 |
| CLWXRP20A30 | CLWXRP20B30 | 200 |
| CLWXRP25A30 | CLWXRP25B30 | 250 |
| CLWXRP30A30 | CLWXRP30B30 | 300 |
| CLWXRP40A30 | CLWXRP40B30 | 400 |
| CLWXRP50A30 | CLWXRP50B30 | 500 |
| CLWXRP60A30 | CLWXRP60B30 | 600 |
| CLWXRP80A30 | CLWXRP80B30 | 800 |

## Insert Riser

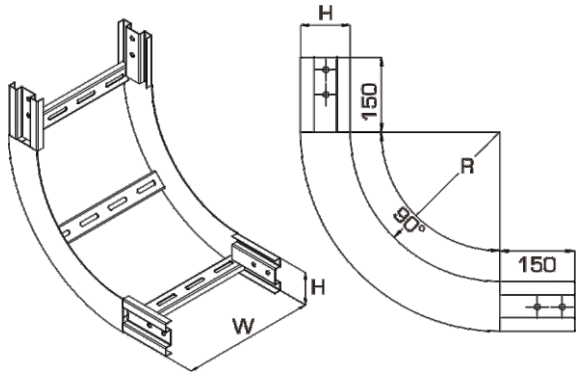


| PART NO. H50 | PART NO. H100 | WIDTH |
|---|---|---|
| CLWIRP05A30 | CLWIRP05B30 | 50 |
| CLWIRP10A30 | CLWIRP10B30 | 100 |
| CLWIRP15A30 | CLWIRP15B30 | 150 |
| CLWIRP20A30 | CLWIRP20B30 | 200 |
| CLWIRP25A30 | CLWIRP25B30 | 250 |
| CLWIRP30A30 | CLWIRP30B30 | 300 |
| CLWIRP40A30 | CLWIRP40B30 | 400 |
| CLWIRP50A30 | CLWIRP50B30 | 500 |
| CLWIRP60A30 | CLWIRP60B30 | 600 |
| CLWIRP80A30 | CLWIRP80B30 | 800 |

## Outside Riser

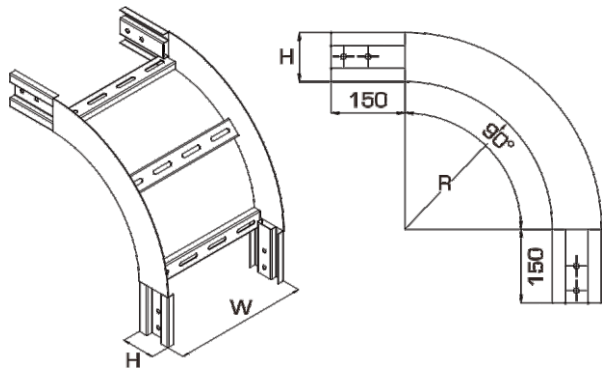


| PART NO. H50 | PART NO. H100 | WIDTH |
|---|---|---|
| CLWORP05A30 | CLWORP05B30 | 50 |
| CLWORP10A30 | CLWORP10B30 | 100 |
| CLWORP15A30 | CLWORP15B30 | 150 |
| CLWORP20A30 | CLWORP20B30 | 200 |
| CLWORP25A30 | CLWORP25B30 | 250 |
| CLWORP30A30 | CLWORP30B30 | 300 |
| CLWORP40A30 | CLWORP40B30 | 400 |
| CLWORP50A30 | CLWORP50B30 | 500 |
| CLWORP60A30 | CLWORP60B30 | 600 |
| CLWORP80A30 | CLWORP80B30 | 800 |

## Reduser

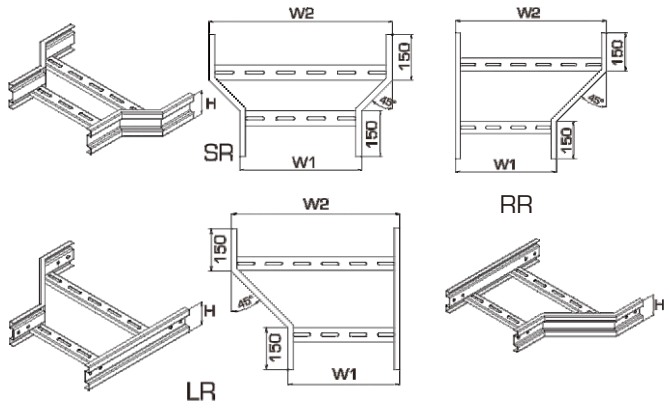


| PART NO. H50 | PART NO. H100 | WIDTH |
|---|---|---|
| CLWSRP05A30 | CLWSRP05B30 | 50 |
| CLWSRP10A30 | CLWSRP10B30 | 100 |
| CLWSRP15A30 | CLWSRP15B30 | 150 |
| CLWSRP20A30 | CLWSRP20B30 | 200 |
| CLWSRP25A30 | CLWSRP25B30 | 250 |
| CLWSRP30A30 | CLWSRP30B30 | 300 |
| CLWSRP40A30 | CLWSRP40B30 | 400 |
| CLWSRP50A30 | CLWSRP50B30 | 500 |
| CLWSRP60A30 | CLWSRP60B30 | 600 |
| CLWSRP80A30 | CLWSRP80B30 | 800 |

## Cable Ladder Heavy Duty

Cable Ladder Heavy Duty ada 3 Type, H100, H127 dan H152 adalah sistem penyangga kabel berkapasitas besar yang dirancang untuk aplikasi industri berat (heavy-duty). Menggunakan profil samping (side rail) dengan tinggi 100 mm, 127mm dan 152mm memberikan kekuatan struktural yang sangat tinggi sehingga mampu menahan beban kabel besar pada bentang panjang serta stabilitas maksimal untuk instalasi kelas heavy-duty.

### Keterangan Produk

| | |
|---|---|
| Nama Produk | Cable Ladder Heavy Duty |
| Raw material | Steel , Stainless , Bluminium |
| Merek | AMD |
| Warna | Galvanized, Other |
| Standards | NEMA |
| Finishing | Electro Plating, Powder Coating<br>Hotdip Galvanized |

### Spesifikasi Produk

| | |
|---|---|
| Thickness | 1,2mm, 1,6mm, 1,8mm, 2mm |
| Height | 100mm, 127mm, 152mm |
| Depth | |
| Lenght | 2400mm, 3000mm |

Other dimensions, thickness are available upon special requirements.

### Straight Cable Ladder Heavy Duty

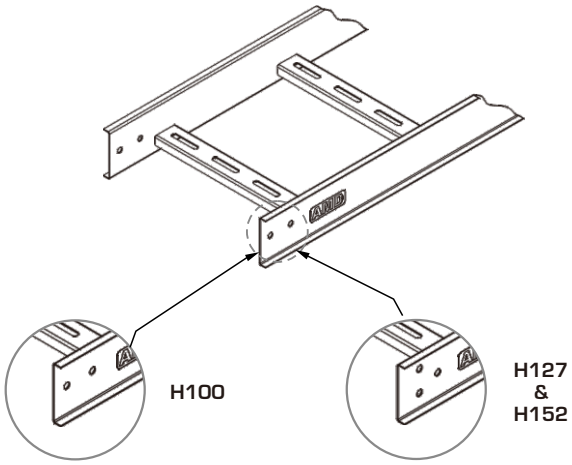


| PBRT NO. H100 | PBRT NO. H152 | WIDTH |
|---|---|---|
| CLHSTP05B | CLHSTP05G | 50 |
| CLHSTP10B | CLHSTP10G | 100 |
| CLHSTP15B | CLHSTP15G | 150 |
| CLHSTP20B | CLHSTP20G | 200 |
| CLHSTP25B | CLHSTP25G | 250 |
| CLHSTP30B | CLHSTP30G | 300 |
| CLHSTP40B | CLHSTP40G | 400 |
| CLHSTP50B | CLHSTP50G | 500 |
| CLHSTP60B | CLHSTP60G | 600 |
| CLHSTP80B | CLHSTP80G | 800 |

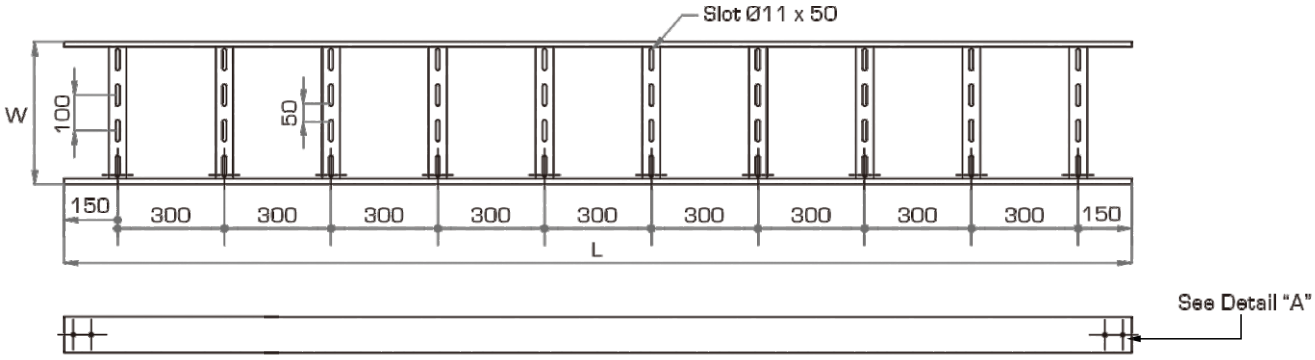


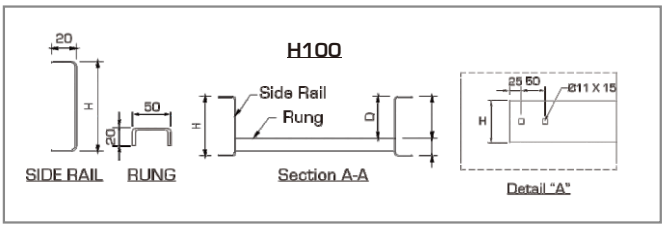


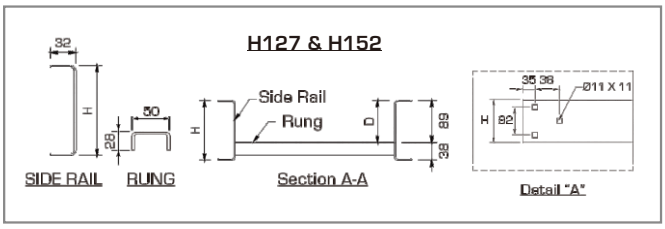

## Horizontal Elbow

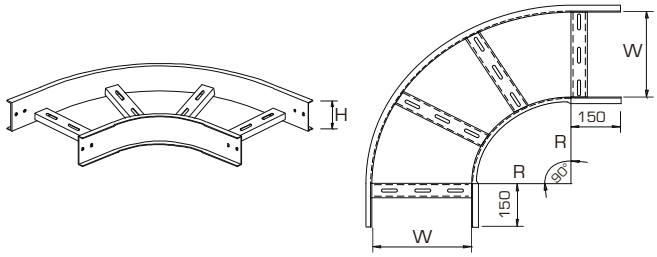


| PART NO. H100 | PART NO. H152 | WIDTH |
|---|---|---|
| CLHELP05B30 | CLHELP05G30 | 50 |
| CLHELP10B30 | CLHELP10G30 | 100 |
| CLHELP15B30 | CLHELP15G30 | 150 |
| CLHELP20B30 | CLHELP20G30 | 200 |
| CLHELP25B30 | CLHELP25G30 | 250 |
| CLHELP30B30 | CLHELP30G30 | 300 |
| CLHELP40B30 | CLHELP40G30 | 400 |
| CLHELP50B30 | CLHELP50G30 | 500 |
| CLHELP60B30 | CLHELP60G30 | 600 |
| CLHELP80B30 | CLHELP80G30 | 800 |

## Horizontal Tee

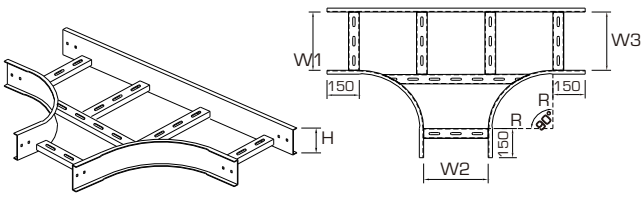


| PART NO. H100 | PART NO. H152 | WIDTH |
|---|---|---|
| CLHTEP05B30 | CLHTEP05G30 | 50 |
| CLHTEP10B30 | CLHTEP10G30 | 100 |
| CLHTEP15B30 | CLHTEP15G30 | 150 |
| CLHTEP20B30 | CLHTEP20G30 | 200 |
| CLHTEP25B30 | CLHTEP25G30 | 250 |
| CLHTEP30B30 | CLHTEP30G30 | 300 |
| CLHTEP40B30 | CLHTEP40G30 | 400 |
| CLHTEP50B30 | CLHTEP50G30 | 500 |
| CLHTEP60B30 | CLHTEP60G30 | 600 |
| CLHTEP80B30 | CLHTEP80G30 | 800 |

## Horizontal Cross

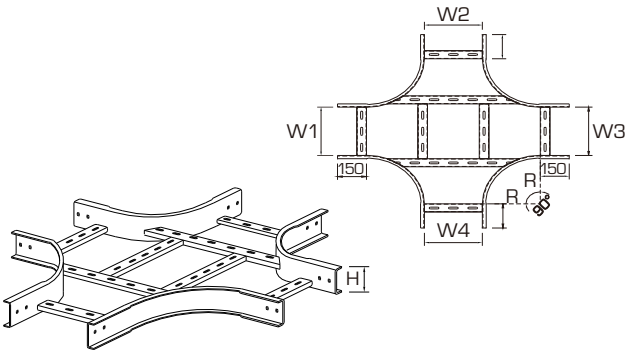


| PART NO. H100 | PART NO. H152 | WIDTH |
|---|---|---|
| CLHXRP05B30 | CLHXRP05G30 | 50 |
| CLHXRP10B30 | CLHXRP10G30 | 100 |
| CLHXRP15B30 | CLHXRP15G30 | 150 |
| CLHXRP20B30 | CLHXRP20G30 | 200 |
| CLHXRP25B30 | CLHXRP25G30 | 250 |
| CLHXRP30B30 | CLHXRP30G30 | 300 |
| CLHXRP40B30 | CLHXRP40G30 | 400 |
| CLHXRP50B30 | CLHXRP50G30 | 500 |
| CLHXRP60B30 | CLHXRP60G30 | 600 |
| CLHXRP80B30 | CLHXRP80G30 | 800 |

## Insert Riser

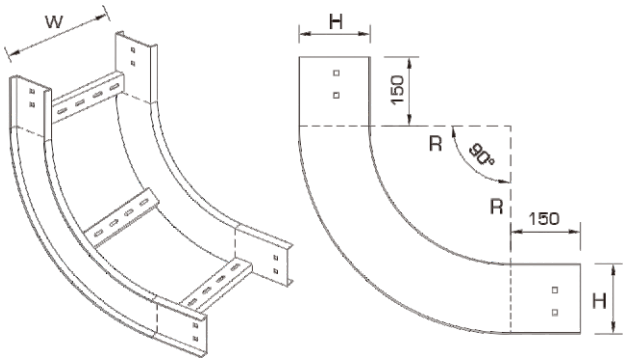


| PART NO. H100 | PART NO. H152 | WIDTH |
|---|---|---|
| CLWIRP05B30 | CLWIRP05G30 | 50 |
| CLWIRP10B30 | CLWIRP10G30 | 100 |
| CLWIRP15B30 | CLWIRP15G30 | 150 |
| CLWIRP20B30 | CLWIRP20G30 | 200 |
| CLWIRP25B30 | CLWIRP25G30 | 250 |
| CLWIRP30B30 | CLWIRP30G30 | 300 |
| CLWIRP40B30 | CLWIRP40G30 | 400 |
| CLWIRP50B30 | CLWIRP50G30 | 500 |
| CLWIRP60B30 | CLWIRP60G30 | 600 |
| CLWIRP80B30 | CLWIRP80G30 | 800 |

## Outside Riser

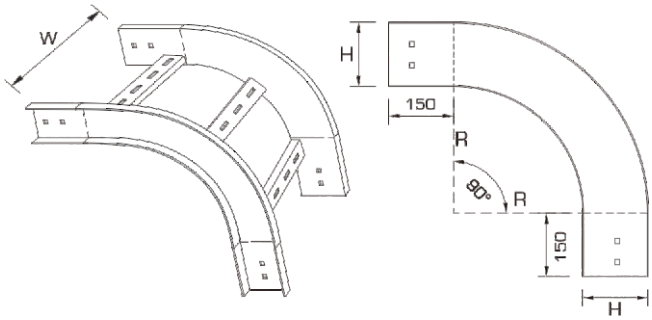


| PART NO. H100 | PART NO. H152 | WIDTH |
|---|---|---|
| CLWORP05B30 | CLWORP05G30 | 50 |
| CLWORP10B30 | CLWORP10G30 | 100 |
| CLWORP15B30 | CLWORP15G30 | 150 |
| CLWORP20B30 | CLWORP20G30 | 200 |
| CLWORP25B30 | CLWORP25G30 | 250 |
| CLWORP30B30 | CLWORP30G30 | 300 |
| CLWORP40B30 | CLWORP40G30 | 400 |
| CLWORP50B30 | CLWORP50G30 | 500 |
| CLWORP60B30 | CLWORP60G30 | 600 |
| CLWORP80B30 | CLWORP80G30 | 800 |

## Reduser

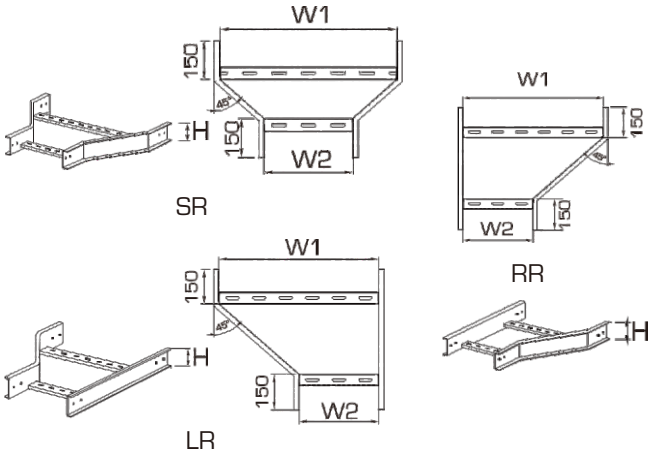


| PART NO. H100 | PART NO. H152 | WIDTH |
|---|---|---|
| CLWSRP05B30 | CLWSRP05G30 | 50 |
| CLWSRP10B30 | CLWSRP10G30 | 100 |
| CLWSRP15B30 | CLWSRP15G30 | 150 |
| CLWSRP20B30 | CLWSRP20G30 | 200 |
| CLWSRP25B30 | CLWSRP25G30 | 250 |
| CLWSRP30B30 | CLWSRP30G30 | 300 |
| CLWSRP40B30 | CLWSRP40G30 | 400 |
| CLWSRP50B30 | CLWSRP50G30 | 500 |
| CLWSRP60B30 | CLWSRP60G30 | 600 |
| CLWSRP80B30 | CLWSRP80G30 | 800 |

## Covers

Covers adalah penutup yang dipasang di atas cable ladder atau cable tray untuk melindungi kabel dari debu, kotoran, air, benturan, serta gangguan lingkungan lainnya. Penutup ini juga membantu menjaga kerapian dan keamanan instalasi, khususnya pada area outdoor atau lingkungan industri. Covers biasanya dibuat dari baja galvanis, aluminium, atau stainless steel untuk memastikan ketahanan terhadap korosi dan kondisi cuaca.

### Keterangan Produk

| | |
|---|---|
| Nama Produk | Covers |
| Raw material | Steel , Stainless , Aluminium |
| Merek | AMD |
| Warna | Galvanized, Other |
| Standards | NEMA |
| Finishing | Electro Plating, Powder Coating<br>Hotdip Galvanized |

### Spesifikasi Produk

| | |
|---|---|
| Thickness | 1,6mm,- 2mm |
| Height | |
| Depth | |
| Lenght | |

Other dimensions, thickness are available upon special requirements.

### Straight Cover
### Solid Flange Cover (SF)

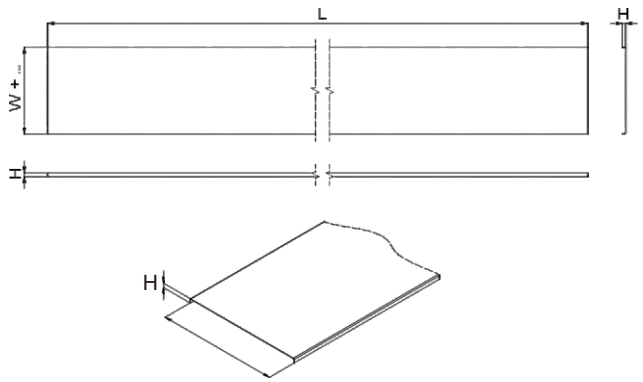


| PART NO | WIDTH |
|---|---|
| SCSF05 | 50 |
| SCSF10 | 100 |
| SCSF15 | 150 |
| SCSF20 | 200 |
| SCSF25 | 250 |
| SCSF30 | 300 |
| SCSF40 | 400 |
| SCSF50 | 500 |
| SCSF60 | 600 |
| SCSF80 | 800 |
| SCSF100 | 1000 |

### Straight Cover
### Peak Flange Cover (PF)

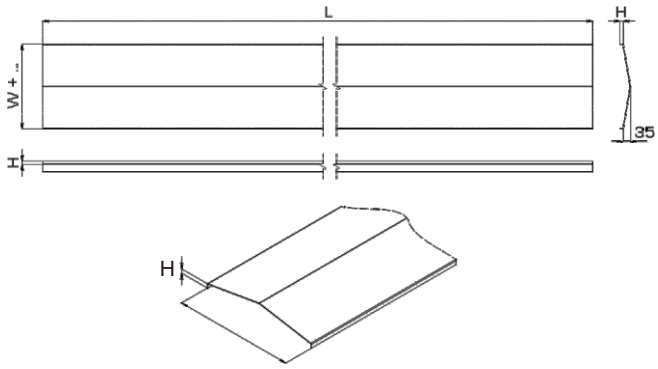


| PART NO | WIDTH |
|---|---|
| SCPF05 | 50 |
| SCPF10 | 100 |
| SCPF15 | 150 |
| SCPF20 | 200 |
| SCPF25 | 250 |
| SCPF30 | 300 |
| SCPF40 | 400 |
| SCPF50 | 500 |
| SCPF60 | 600 |
| SCPF80 | 800 |
| SCPF100 | 1000 |

## Elbow Cover
## Solid Flange Cover (SF)

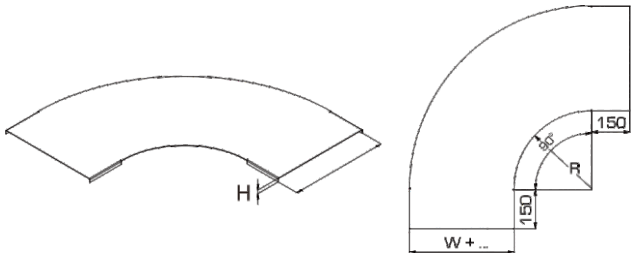


| PART NO | WIDTH |
|---|---|
| ECSF0530 | 50 |
| ECSF1030 | 100 |
| ECSF1530 | 150 |
| ECSF2030 | 200 |
| ECSF2530 | 250 |
| ECSF3030 | 300 |
| ECSF4030 | 400 |
| ECSF5030 | 500 |
| ECSF6030 | 600 |
| ECSF8030 | 800 |
| ECSF10030 | 1000 |

## Elbow Cover
## Solid Flange Cover (SF) Diagonal

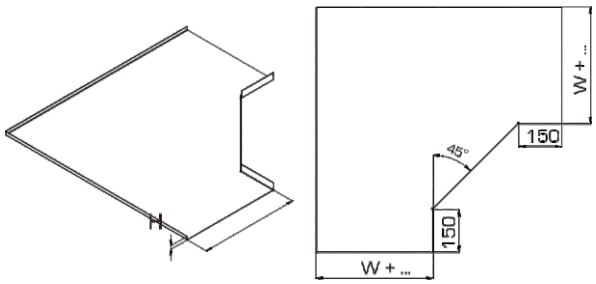


| PART NO | WIDTH |
|---|---|
| ECSFD0530 | 50 |
| ECSFD1030 | 100 |
| ECSFD1530 | 150 |
| ECSFD2030 | 200 |
| ECSFD2530 | 250 |
| ECSFD3030 | 300 |
| ECSFD4030 | 400 |
| ECSFD5030 | 500 |
| ECSFD6030 | 600 |
| ECSFD8030 | 800 |
| ECSFD10030 | 1000 |

## Elbow Cover
## Peak Flange Cover (PF)

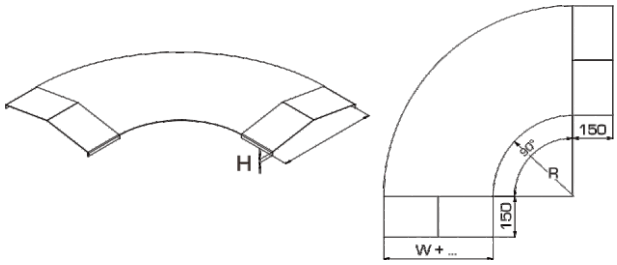


| PART NO | WIDTH |
|---|---|
| ECPF0530 | 50 |
| ECPF1030 | 100 |
| ECPF1530 | 150 |
| ECPF2030 | 200 |
| ECPF2530 | 250 |
| ECPF3030 | 300 |
| ECPF4030 | 400 |
| ECPF5030 | 500 |
| ECPF6030 | 600 |
| ECPF8030 | 800 |
| ECPF10030 | 1000 |

## Tee Cover
## Solid Flange Cover (SF)

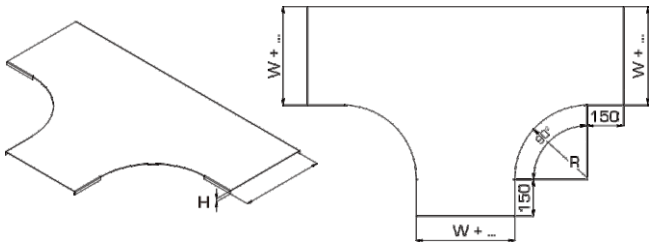


| PART NO | WIDTH |
|---|---|
| TCSF0530 | 50 |
| TCSF1030 | 100 |
| TCSF1530 | 150 |
| TCSF2030 | 200 |
| TCSF2530 | 250 |
| TCSF3030 | 300 |
| TCSF4030 | 400 |
| TCSF5030 | 500 |
| TCSF6030 | 600 |
| TCSF8030 | 800 |
| TCSF10030 | 1000 |

## Tee Cover
## Solid Flange Cover (SF) Diagonal

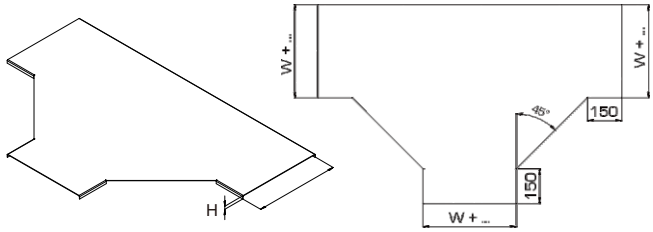


| PART NO | WIDTH |
|---|---|
| TCSFD0530 | 50 |
| TCSFD1030 | 100 |
| TCSFD1530 | 150 |
| TCSFD2030 | 200 |
| TCSFD2530 | 250 |
| TCSFD3030 | 300 |
| TCSFD4030 | 400 |
| TCSFD5030 | 500 |
| TCSFD6030 | 600 |
| TCSFD8030 | 800 |
| TCSFD10030 | 1000 |

## Tee Cover
## Peak Flange Cover (PF)

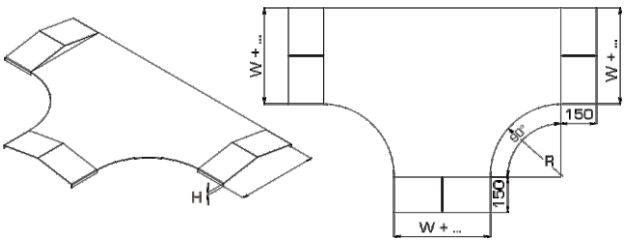


| PART NO | WIDTH |
|---|---|
| TCPF0530 | 50 |
| TCPF1030 | 100 |
| TCPF1530 | 150 |
| TCPF2030 | 200 |
| TCPF2530 | 250 |
| TCPF3030 | 300 |
| TCPF4030 | 400 |
| TCPF5030 | 500 |
| TCPF6030 | 600 |
| TCPF8030 | 800 |
| TCPF10030 | 1000 |

## Cross Cover
## Solid Flange Cover (SF)

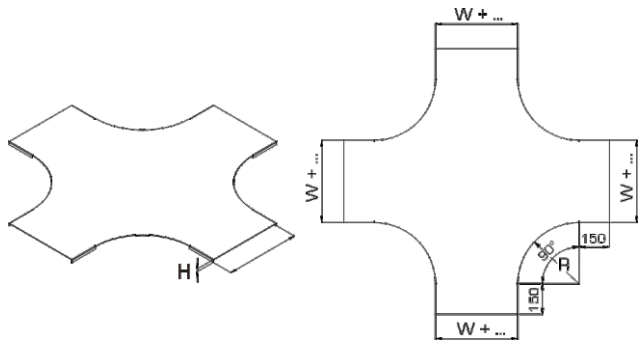


| PART NO | WIDTH |
|---|---|
| XCSF0530 | 50 |
| XCSF1030 | 100 |
| XCSF1530 | 150 |
| XCSF2030 | 200 |
| XCSF2530 | 250 |
| XCSF3030 | 300 |
| XCSF4030 | 400 |
| XCSF5030 | 500 |
| XCSF6030 | 600 |
| XCSF8030 | 800 |
| XCSF10030 | 1000 |

## Cross Cover
## Solid Flange Cover (SF) Diagonal

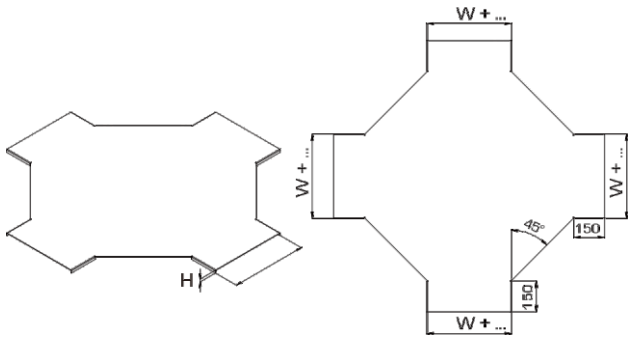


| PART NO | WIDTH |
|---|---|
| XCSFD0530 | 50 |
| XCSFD1030 | 100 |
| XCSFD1530 | 150 |
| XCSFD2030 | 200 |
| XCSFD2530 | 250 |
| XCSFD3030 | 300 |
| XCSFD4030 | 400 |
| XCSFD5030 | 500 |
| XCSFD6030 | 600 |
| XCSFD8030 | 800 |
| XCSFD10030 | 1000 |

## Cross Cover
## Peak Flange Cover (PF)

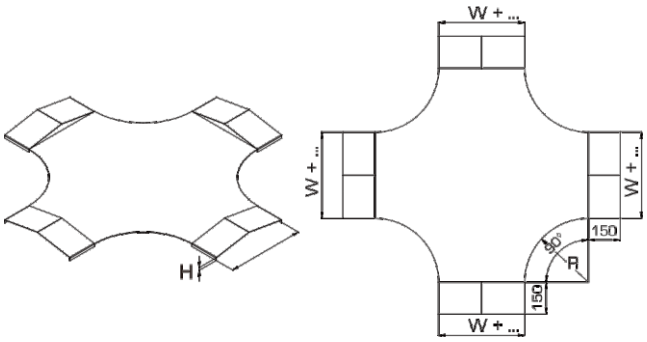


| PART NO | WIDTH |
|---|---|
| XCPF0530 | 50 |
| XCPF1030 | 100 |
| XCPF1530 | 150 |
| XCPF2030 | 200 |
| XCPF2530 | 250 |
| XCPF3030 | 300 |
| XCPF4030 | 400 |
| XCPF5030 | 500 |
| XCPF6030 | 600 |
| XCPF8030 | 800 |
| XCPF10030 | 1000 |

## Inside Riser Cover
## Solid Flange Cover (SF)

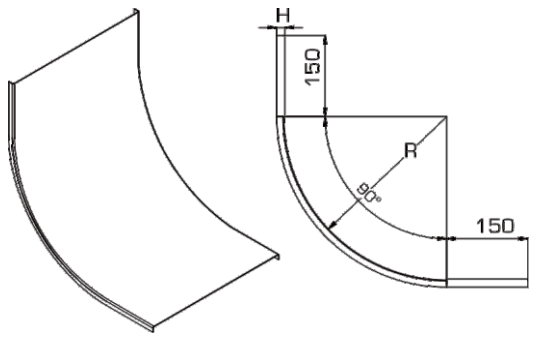


| PART NO | WIDTH |
|---|---|
| ICSF0530 | 50 |
| ICSF1030 | 100 |
| ICSF1530 | 150 |
| ICSF2030 | 200 |
| ICSF2530 | 250 |
| ICSF3030 | 300 |
| ICSF4030 | 400 |
| ICSF5030 | 500 |
| ICSF6030 | 600 |
| ICSF8030 | 800 |
| ICSF10030 | 1000 |

## Inside Riser Cover
## Solid Flange Cover (SF) Diagonal

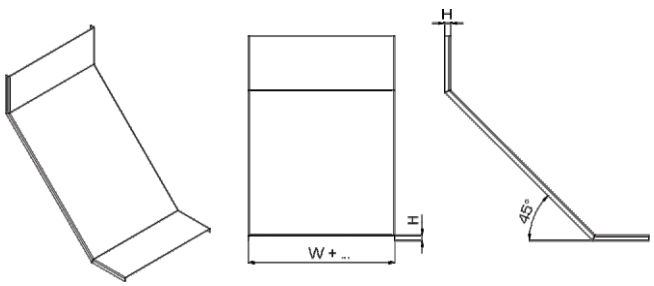


| PART NO | WIDTH |
|---|---|
| ICSFD0530 | 50 |
| ICSFD1030 | 100 |
| ICSFD1530 | 150 |
| ICSFD2030 | 200 |
| ICSFD2530 | 250 |
| ICSFD3030 | 300 |
| ICSFD4030 | 400 |
| ICSFD5030 | 500 |
| ICSFD6030 | 600 |
| ICSFD8030 | 800 |
| ICSFD10030 | 1000 |

## Inside Riser Cover
## Peak Flange Cover (PF)

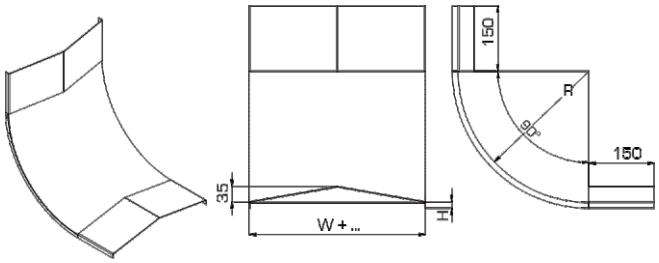


| PART NO | WIDTH |
|---|---|
| ICPF0530 | 50 |
| ICPF1030 | 100 |
| ICPF1530 | 150 |
| ICPF2030 | 200 |
| ICPF2530 | 250 |
| ICPF3030 | 300 |
| ICPF4030 | 400 |
| ICPF5030 | 500 |
| ICPF6030 | 600 |
| ICPF8030 | 800 |
| ICPF10030 | 1000 |

## Outside Riser Cover
## Solid Flange Cover (SF)

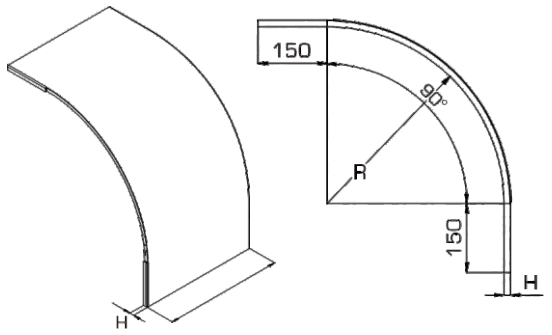


| PART NO | WIDTH |
|---|---|
| OCSF0530 | 50 |
| OCSF1030 | 100 |
| OCSF1530 | 150 |
| OCSF2030 | 200 |
| OCSF2530 | 250 |
| OCSF3030 | 300 |
| OCSF4030 | 400 |
| OCSF5030 | 500 |
| OCSF6030 | 600 |
| OCSF8030 | 800 |
| OCSF10030 | 1000 |

## Outside Riser Cover
## Solid Flange Cover (SF) Diagonal

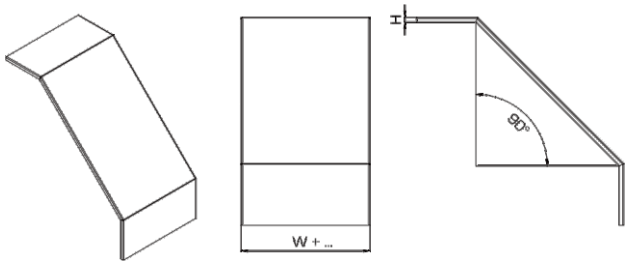


| PART NO | WIDTH |
|---|---|
| OCSFD0530 | 50 |
| OCSFD1030 | 100 |
| OCSFD1530 | 150 |
| OCSFD2030 | 200 |
| OCSFD2530 | 250 |
| OCSFD3030 | 300 |
| OCSFD4030 | 400 |
| OCSFD5030 | 500 |
| OCSFD6030 | 600 |
| OCSFD8030 | 800 |
| OCSFD10030 | 1000 |

## Outside Riser Cover
## Peak Flange Cover (PF)

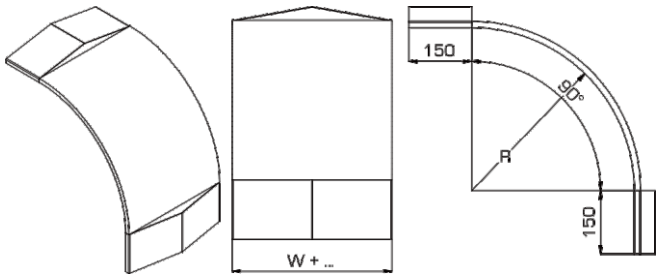


| PART NO | WIDTH |
|---|---|
| OCPF0530 | 50 |
| OCPF1030 | 100 |
| OCPF1530 | 150 |
| OCPF2030 | 200 |
| OCPF2530 | 250 |
| OCPF3030 | 300 |
| OCPF4030 | 400 |
| OCPF5030 | 500 |
| OCPF6030 | 600 |
| OCPF8030 | 800 |
| OCPF10030 | 1000 |

## Reducer Cover
## Solid Flange Cover (SF)

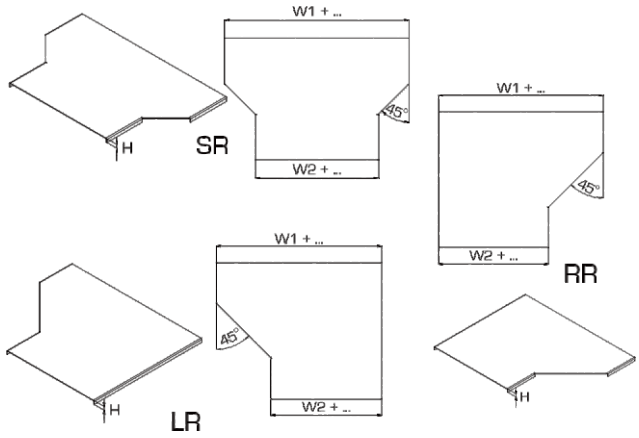


| PART NO | W1 | W2 |
|---|---|---|
| RCSSF3015 | 300 | 150 |
| RCSSF4020 | 400 | 200 |
| RCSSF4030 | 400 | 300 |
| RCSSF6015 | 600 | 150 |
| RCSSF6030 | 600 | 300 |
| RCSSF6040 | 600 | 400 |
| RCSSF6040 | 800 | 400 |
| RCSSF8060 | 800 | 600 |

## Hold Down Clamp Set & Hold Down Clip Set

Hold Down Clip Set adalah aksesori penjepit yang berfungsi menahan bagian tepi cable ladder atau cable tray pada bracket atau support. Clip ini memberikan pengikatan yang lebih praktis dan cepat, terutama untuk instalasi ringan hingga menengah. Biasanya digunakan untuk mencegah angkatan vertikal (uplift) atau gerakan lateral tray tanpa menambah beban berat pada struktur.

### Keterangan Produk

| | |
|---|---|
| Nama Produk | Hold Down Clamp Set & Hold Down Clip Set |
| Raw material | Steel , Stainless , Aluminium |
| Merek | AMD |
| Warna | Galvanized, Other |
| Standards | NEMA |
| Finishing | Electro Plating, Powder Coating<br>Hotdip Galvanized |

### Spesifikasi Produk

| | |
|---|---|
| Thickness | 1,6mm,- 2mm |
| Height | |
| Depth | |
| Lenght | |

Other dimensions, thickness are available upon special requirements.

### Hold Down Clamp Set

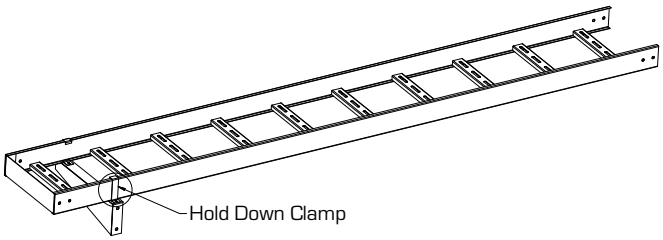


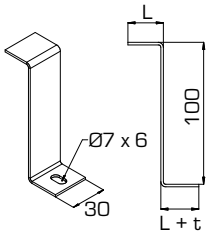


**Hold Down Clamp (A)**

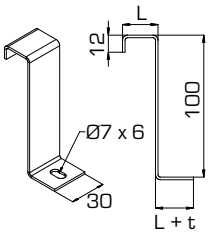


**Hold Down Clamp (B)**

| PART NO | WIDTH |
|---|---|
| ACCAP0530 | 50 |
| ACCAP1030 | 100 |
| ACCAP1530 | 150 |
| ACCAP2030 | 200 |
| ACCAP2530 | 250 |
| ACCAP3030 | 300 |
| ACCAP4030 | 400 |
| ACCAP5030 | 500 |
| ACCAP6030 | 600 |
| ACCAP8030 | 800 |
| ACCAP10030 | 1000 |

| TYPE | L |
|---|---|
| SLU.SLW | 25 |
| HD | 37 |
| AL "I" Type | 60 |

### Hold Down Clip Set

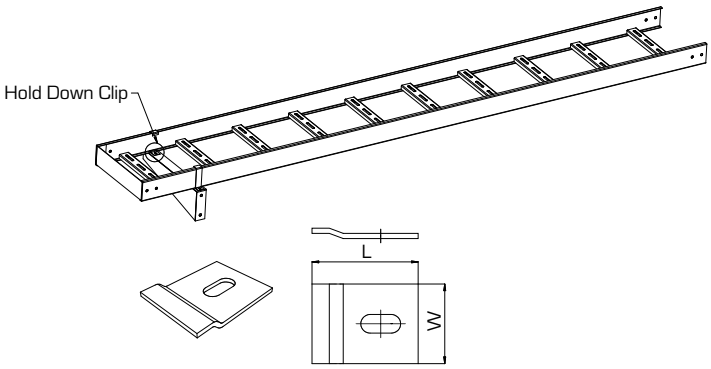


**Hold Down Clip**

| PART NO | PART NO | WIDTH |
|---|---|---|
| ACCIP4030 | ACCIP4030 | 30 |

## Bracket Support

Bracket Support adalah komponen penyangga yang digunakan untuk menopang dan mengamankan pemasangan cable ladder maupun cable tray pada dinding, plafon, atau struktur bangunan lainnya. Bracket ini berfungsi menjaga stabilitas serta memastikan jalur kabel berada pada posisi yang tepat dan aman. Terbuat dari material kuat seperti baja galvanis atau stainless steel, Bracket Support dirancang untuk menahan beban kabel sesuai kapasitas instalasi dan memberikan kestabilan pada sistem manajemen kabel.

### Keterangan Produk

| | |
|---|---|
| Nama Produk | Bracket Support |
| Raw material | Steel , Stainless , Aluminium |
| Merek | AMD |
| Warna | Galvanized, Other |
| Standards | NEMA |
| Finishing | Electro Plating, Powder Coating<br>Hotdip Galvanized |

### Spesifikasi Produk

| | |
|---|---|
| Thickness | 1,6mm, - 2mm |
| Height | |
| Depth | |
| Lenght | |

Other dimensions, thickness are available upon special requirements.

**Bracket Support for SLU,SLW,STC & STU**

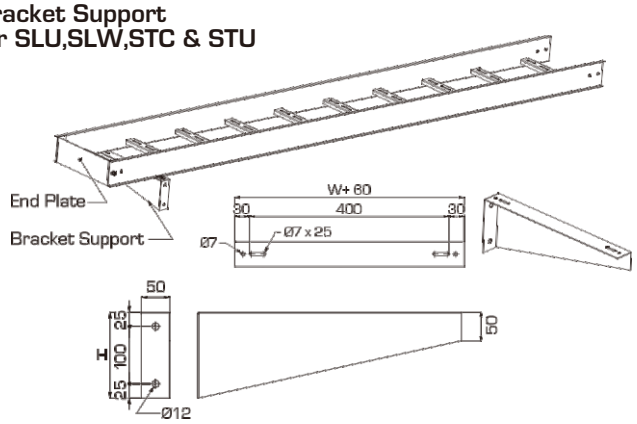


| PART NO | WIDTH |
|---|---|
| ACBSP05 | 50 |
| ACBSP10 | 100 |
| ACBSP15 | 150 |
| ACBSP20 | 200 |
| ACBSP25 | 250 |
| ACBSP30 | 300 |
| ACBSP40 | 400 |
| ACBSP50 | 500 |
| ACBSP60 | 600 |
| ACBSP80 | 800 |
| ACBSP100 | 1000 |

**Bracket Support for HD**

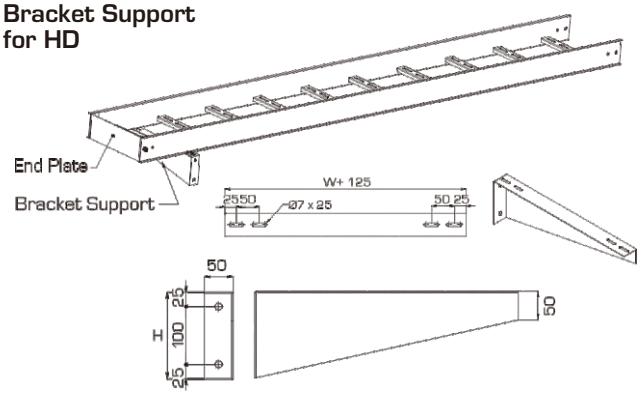


| PART NO | WIDTH |
|---|---|
| ACHBSP05 | 50 |
| ACHBSP10 | 100 |
| ACHBSP15 | 150 |
| ACHBSP20 | 200 |
| ACHBSP25 | 250 |
| ACHBSP30 | 300 |
| ACHBSP40 | 400 |
| ACHBSP50 | 500 |
| ACHBSP60 | 600 |
| ACHBSP80 | 800 |
| ACHBSP100 | 1000 |

**Bracket Support for AL "I"**

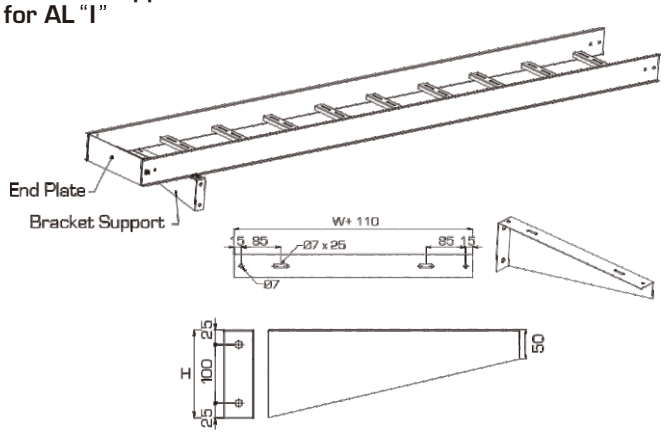


| PART NO | WIDTH |
|---|---|
| ACIBSP05 | 50 |
| ACIBSP10 | 100 |
| ACIBSP15 | 150 |
| ACIBSP20 | 200 |
| ACIBSP25 | 250 |
| ACIBSP30 | 300 |
| ACIBSP40 | 400 |
| ACIBSP50 | 500 |
| ACIBSP60 | 600 |
| ACIBSP80 | 800 |
| ACIBSP100 | 1000 |

## End Plate Set

End Plate Set adalah aksesori penutup yang dipasang pada ujung cable ladder atau cable tray untuk memberikan batas akhir yang rapi serta melindungi kabel dari tepi tajam. Komponen ini membantu meningkatkan keselamatan instalasi, mencegah kerusakan kabel, dan memberikan tampilan akhir yang lebih profesional pada sistem manajemen kabel. Biasanya dibuat dari baja galvanis atau stainless steel agar tahan korosi dan cocok untuk berbagai kondisi lingkungan.kestabilan pada sistem manajemen kabel.

### Keterangan Produk

| | |
|---|---|
| Nama Produk | End Plate Set |
| Raw material | Steel , Stainless , Aluminium |
| Merek | AMD |
| Warna | Galvanized, Other |
| Standards | NEMA |
| Finishing | Electro Plating, Powder Coating<br>Hotdip Galvanized |

### Spesifikasi Produk

| | |
|---|---|
| Thickness | 1,6mm, - 2mm |
| Height | |
| Depth | |
| Lenght | |

Other dimensions, thickness are available upon special requirements.

### End Plate Set for SLU, SLW, STC & STU

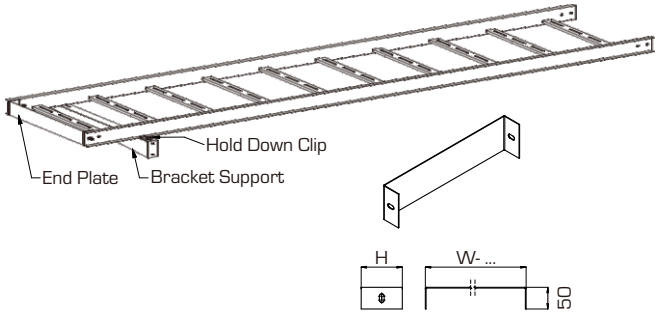


| PART NO | WIDTH |
|---|---|
| ACESP05 | 50 |
| ACESP10 | 100 |
| ACESP15 | 150 |
| ACESP20 | 200 |
| ACESP25 | 250 |
| ACESP30 | 300 |
| ACESP40 | 400 |
| ACESP50 | 500 |
| ACESP60 | 600 |
| ACESP80 | 800 |
| ACESP100 | 1000 |

### End Plate Set for HD, AL " "I

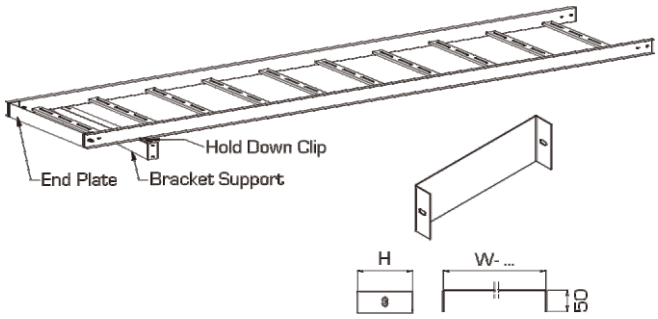

## Hanger Rod Set

Hanger Rod Set adalah perlengkapan gantung yang digunakan untuk menopang cable ladder atau cable tray dari struktur atas, seperti plafon atau balok bangunan. Set ini terdiri dari batang berulir (threaded rod) dan aksesoris pengunci untuk memastikan tray atau ladder tergantung dengan stabil dan aman. Hanger Rod Set memberikan fleksibilitas dalam pengaturan ketinggian serta mampu menahan beban kabel sesuai kapasitas instalasi.

### Keterangan Produk

| | |
|---|---|
| Nama Produk | Hanger Rod Set |
| Raw material | Steel , Stainless , Aluminium |
| Merek | AMD |
| Warna | Galvanized, Other |
| Standards | NEMA |
| Finishing | Electro Plating, Powder Coating<br>Hotdip Galvanized |

### Spesifikasi Produk

| | |
|---|---|
| Thickness | 1,6mm, - 2mm |
| Height | |
| Depth | |
| Lenght | |

Other dimensions, thickness are available upon special requirements.

### Hanger Rod Set

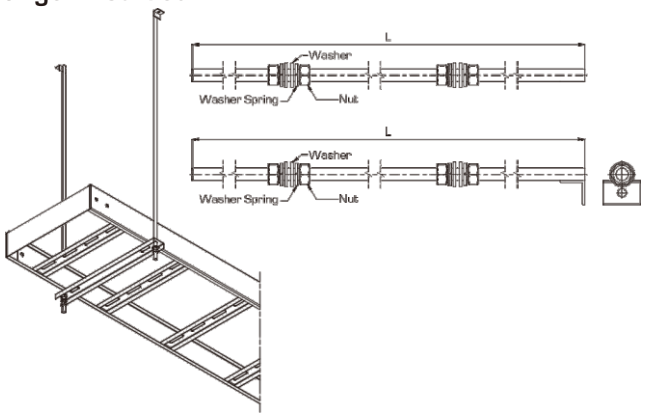


| PART NO | WIDTH | LENGTH |
|---|---|---|
| ACHR38 | 3.8" | Available in 1, 1.5, 2 m |
| ACHR12 | 1/2" | and in full or part threaded |
| ACHR34 | 3/4" | |

## Bolt Nut & Washer

Hanger Rod Set adalah perlengkapan gantung yang digunakan untuk menopang cable ladder atau cable tray dari struktur atas, seperti plafon atau balok bangunan. Set ini terdiri dari batang berulir (threaded rod) dan aksesoris pengunci untuk memastikan tray atau ladder tergantung dengan stabil dan aman. Hanger Rod Set memberikan fleksibilitas dalam pengaturan ketinggian serta mampu menahan beban kabel sesuai kapasitas instalasi.

### Bolt Nut & Washer

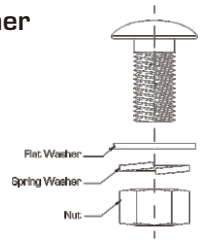


| PART NO | M | L |
|---|---|---|
| ACSNB38 | 3.8" | 3/4" |
| ACSNB38 | 3/8" | 1" |

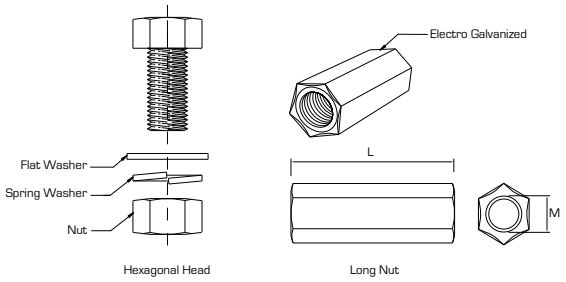


| M | L |
|---|---|
| 6 | 20 |
| 8 | 20 |
| 10 | 30 |
| 12 | 40 |
| 16 | 50 |
| 20 | 50 |

## Earth Bonding Strip

Earth Bonding Strip adalah strip penghantar yang digunakan untuk menyambungkan bagian-bagian cable ladder atau cable tray ke sistem pembumian (grounding). Komponen ini memastikan kontinuitas listrik antar segmen tray/ladder sehingga mencegah potensi beda tegangan dan meningkatkan keselamatan instalasi. Terbuat dari material konduktif seperti tembaga atau baja berlapis, Earth Bonding Strip berfungsi sebagai jalur grounding tambahan yang andal dalam sistem manajemen kabel.

### Keterangan Produk

| | |
|---|---|
| Nama Produk | Earth Bonding Strip |
| Raw material | Steel , Stainless , Aluminium |
| Merek | AMD |
| Warna | Galvanized, Other |
| Standards | NEMA |
| Finishing | Electro Plating, Powder Coating<br>Hotdip Galvanized |

### Spesifikasi Produk

| | |
|---|---|
| Thickness | 1,6mm, - 2mm |
| Height | |
| Depth | |
| Lenght | |

Other dimensions, thickness are available upon special requirements.

## Earth Bonding Strip

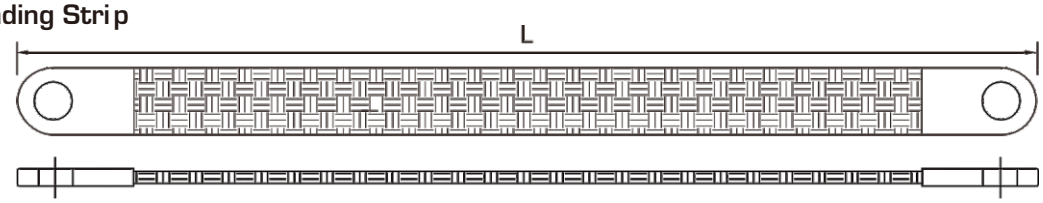


## Cover Clamp Set

Cover Clamp Set adalah perangkat penjepit yang digunakan untuk mengunci dan memastikan cover (penutup) cable ladder atau cable tray tetap terpasang kuat pada tempatnya. Clamp ini mencegah penutup terlepas akibat angin, getaran, atau beban instalasi, serta memberikan perlindungan tambahan terhadap kabel di dalam tray. Umumnya dibuat dari baja galvanis atau stainless steel untuk ketahanan korosi.

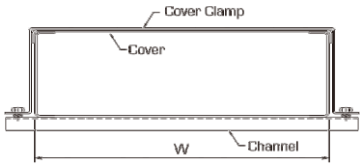


CC - GEN

| PART NO | WIDTH |
|---|---|
| ACCGENP05 | 50 |
| ACCGENP10 | 100 |
| ACCGENP15 | 150 |
| ACCGENP20 | 200 |
| ACCGENP25 | 250 |
| ACCGENP30 | 300 |
| ACCGENP40 | 400 |
| ACCGENP50 | 500 |
| ACCGENP60 | 600 |
| ACCGENP80 | 800 |
| ACCGENP100 | 1000 |

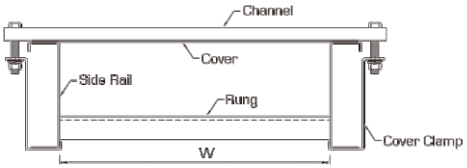


CC - LH

| PART NO | WIDTH |
|---|---|
| ACCCLHP05 | 50 |
| ACCCLHP10 | 100 |
| ACCCLHP15 | 150 |
| ACCCLHP20 | 200 |
| ACCCLHP25 | 250 |
| ACCCLHP30 | 300 |
| ACCCLHP40 | 400 |
| ACCCLHP50 | 500 |
| ACCCLHP60 | 600 |
| ACCCLHP80 | 800 |
| ACCCLHP100 | 1000 |

**Straight Separator**

Straight Separator adalah komponen pemisah lurus yang dipasang di dalam cable ladder atau cable tray untuk mengatur dan memisahkan jalur kabel sesuai kategori atau fungsi. Separator ini membantu mencegah interferensi antar kabel, menjaga kerapian instalasi, serta memudahkan identifikasi jalur kabel. Terbuat dari material logam atau lembaran galvanis yang kuat dan tahan korosi.

## Keterangan Produk

| | |
|---|---|
| Nama Produk | Straight Separator<br>Steel , Stainless , Aluminium |
| Raw material | AMD |
| Merek | Galvanized, Other |
| Warna | NEMA |
| Standards | Electro Plating, Powder Coating |
| Finishing | Hotdip Galvanized |

## Spesifikasi Produk

| | |
|---|---|
| Thickness | 1,6mm, - 2mm |
| Height | 100mm, 127mm, 152mm |
| Depth | |
| Lenght | 2400mm, 3000mm |

Other dimensions, thickness are available upon special requirements.

**Straight Separator**

| PART NO | WIDTH | WIDTH | BOLT,NUT & WASHER |
|---|---|---|---|
| ACSEF30B | DEPTH | 30 | |
| ACSEF30D | DEPTH | 30 | ROUND HEAD WITH |
| ACSEF30E | DEPTH | 30 | SQUARE NECK |
| ACSEF30F | DEPTH | 30 | |

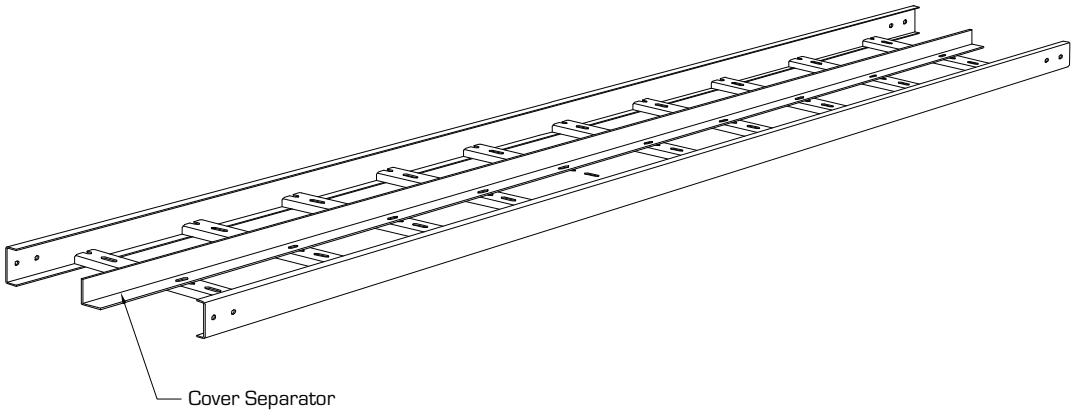


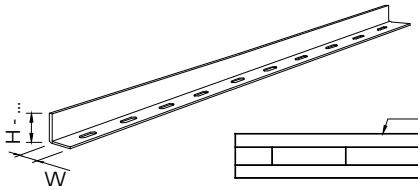


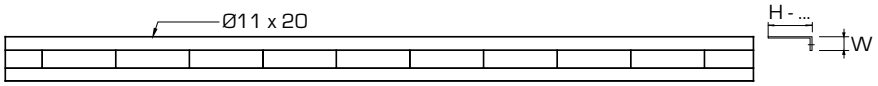


Straight Separator For Ladder

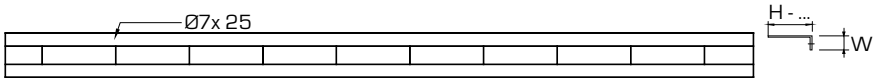


Straight Separator For Tray & AL "I"

## Hanger Beam

Hanger Beam adalah balok penyangga horizontal yang digunakan sebagai struktur gantung untuk memasang cable ladder atau cable tray pada area plafon atau rangka bangunan. Komponen ini berfungsi mendistribusikan beban tray beserta kabelnya secara merata dan menjadi titik tumpu bagi hanger rod atau bracket gantung. Terbuat dari material baja kuat seperti galvanis atau stainless steel, Hanger Beam memastikan instalasi tetap stabil, aman, dan kokoh.

### Keterangan Produk

| | |
|---|---|
| Nama Produk | Hanger Beam |
| Raw material | Steel , Stainless , Aluminium |
| Merek | AMD |
| Warna | Galvanized, Other |
| Standards | NEMA |
| Finishing | Electro Plating, Powder Coating<br>Hotdip Galvanized |

### Spesifikasi Produk

| | |
|---|---|
| Thickness | 1,6mm, - 2mm |
| Height | |
| Depth | |
| Lenght | |

Other dimensions, thickness are available upon special requirements.

### Hanger Beam for SLU, SLW, STC, STU, Duct & Trunking

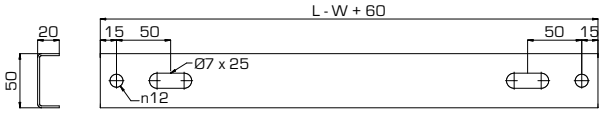


| PART NO | WIDTH |
|---|---|
| ACHBP05 | 50 |
| ACHBP10 | 100 |
| ACHBP15 | 150 |
| ACHBP20 | 200 |
| ACHBP25 | 250 |
| ACHBP30 | 300 |
| ACHBP40 | 400 |
| ACHBP50 | 500 |
| ACHBP60 | 600 |
| ACHBP80 | 800 |
| ACHBP100 | 1000 |

### Hanger Beam for HD

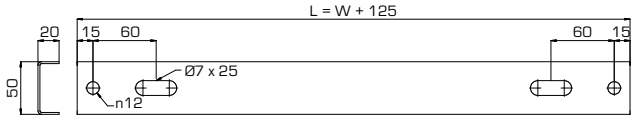


| PART NO | WIDTH |
|---|---|
| ACHHBP05 | 50 |
| ACHHBP10 | 100 |
| ACHHBP15 | 150 |
| ACHHBP20 | 200 |
| ACHHBP25 | 250 |
| ACHHBP30 | 300 |
| ACHHBP40 | 400 |
| ACHHBP50 | 500 |
| ACHHBP60 | 600 |
| ACHHBP80 | 800 |
| ACHHBP100 | 1000 |

## Hanger Beam for AL " I

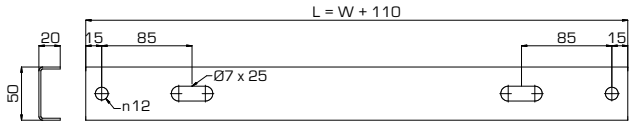


| PART NO | WIDTH |
|---|---|
| ACIHBP05 | 50 |
| ACIHBP10 | 100 |
| ACIHBP15 | 150 |
| ACIHBP20 | 200 |
| ACIHBP25 | 250 |
| ACIHBP30 | 300 |
| ACIHBP40 | 400 |
| ACIHBP50 | 500 |
| ACIHBP60 | 600 |
| ACIHBP80 | 800 |
| ACIHBP100 | 1000 |

## Joint Set, Horizontal Fishplate, Vertical Fishplate, Splice Plate For Stand

### Keterangan Produk

| | |
|---|---|
| Nama Produk | Joint Set, Horizontal Fishplate, Vertical Fishplate, Splice Plate For Stand |
| Raw material | Steel , Stainless , Aluminium |
| Merek | AMD |
| Warna | Galvanized, Other |
| Standards | NEMA |
| Finishing | Electro Plating, Powder Coating<br>Hotdip Galvanized |

### Spesifikasi Produk

| | |
|---|---|
| Thickness | 1,6mm, - 2mm |
| Height | |
| Depth | |
| Lenght | |

Other dimensions, thickness are available upon special requirements.

### Joint Set

Joint Set adalah satu set komponen sambungan yang digunakan untuk menghubungkan dua segmen cable ladder atau cable tray. Set ini memastikan penyambungan yang kuat, stabil, dan aman sehingga tray dapat menahan beban kabel secara kontinu di sepanjang instalasi.

### Horizontal Fishplate

Horizontal Fishplate adalah plat sambungan yang digunakan untuk menghubungkan dua segmen cable ladder atau cable tray pada posisi lurus (horizontal). Komponen ini menjaga keselarasan dan kekuatan struktur pada sambungan horizontal.

### Vertical Fishplate

Vertical Fishplate adalah plat sambungan yang dirancang untuk menghubungkan segmen cable ladder atau cable tray pada perubahan elevasi atau sambungan vertikal. Fishplate ini memastikan struktur tetap kokoh meskipun terdapat perubahan arah naik atau turun.

### Splice Plate Set for Stand

Splice Plate Set for Stand adalah set plat sambungan khusus yang digunakan untuk menghubungkan atau memperkuat bagian-bagian stand atau penyangga kabel. Komponen ini memastikan stabilitas struktur pendukung dan memberikan kekuatan tambahan pada area sambungan atau peralihan antar elemen stand.

**Type U / Cable Trunking**

**Joint Set**

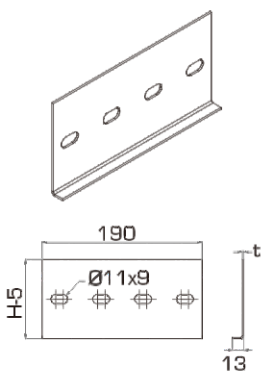


CTUJS

**Horizontal Fishplate**

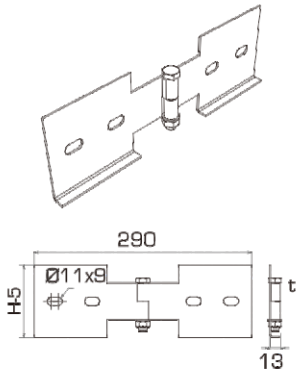


CTUHF

**Vertical Fishplate**

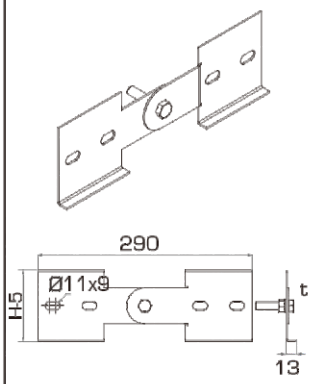


CTUVF

**Splice Plate Set For Stand**

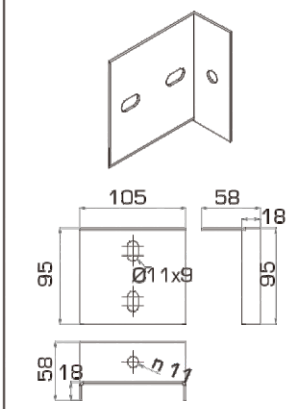


CTUFS

## Cable Tray Type C / Cable Duct / Cable Ladder Type U

### Joint Set

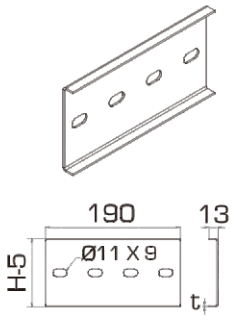


CTCJS

### Horizontal Fishplate

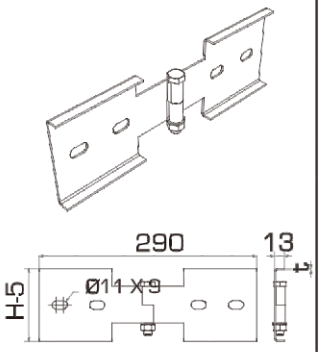


CTCHF

### Vertical Fishplate

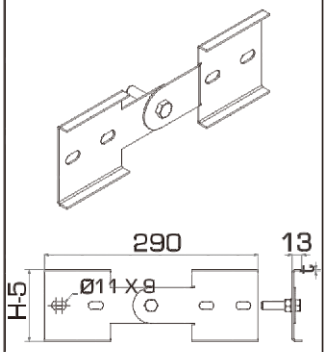


CTCVF

### Splice Plate Set For Stand

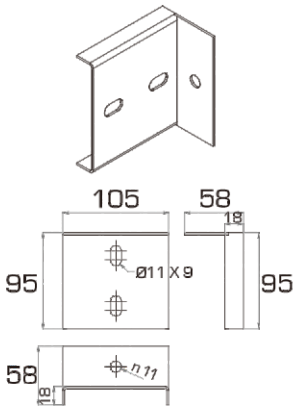


CTCFS

## Straight Cable Ladder Type W

### JOINT SET

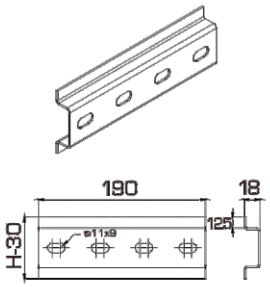


CLWSTPJS

### HORIZONTAL FISHPLATE

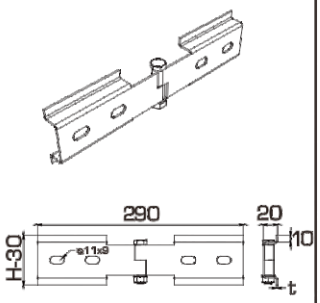


CLWSTPHF

### VERTICAL FISHPLATE

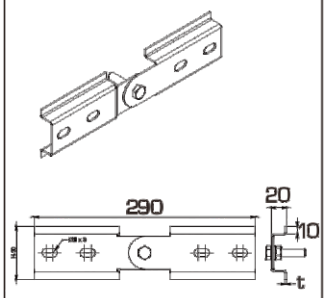


CLWSTPVF

### SPLICE PLATE SET FOR STAND

CLWSTPFS

## Straight Cable Ladder Heavy Duty Type H100

### JOINT SET

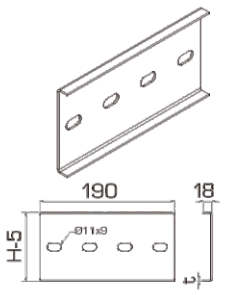


CLHSTPJS

### HORIZONTAL FISHPLATE

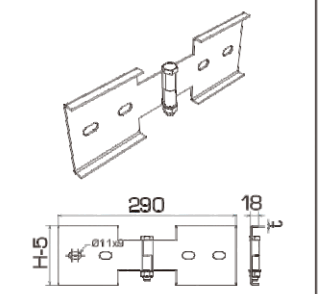


CLHSTPHF

### VERTICAL FISHPLATE

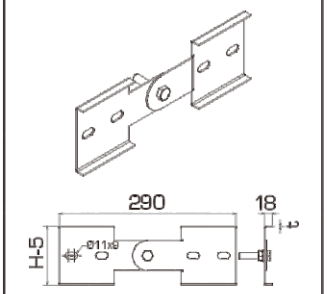


CLHSTPVF

### SPLICE PLATE SET FOR STAND

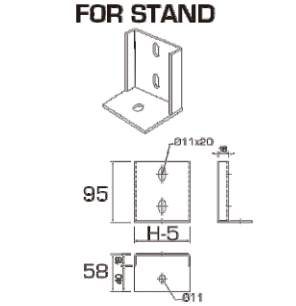


CLHSTPFS

## Straight Cable Ladder Heavy Duty Type H127

### JOINT SET

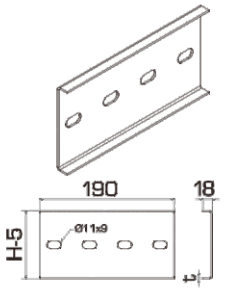


CLHSTPJS

### HORIZONTAL FISHPLATE

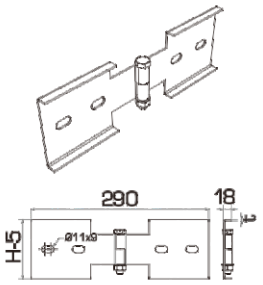


CLHSTPHF

### VERTICAL FISHPLATE

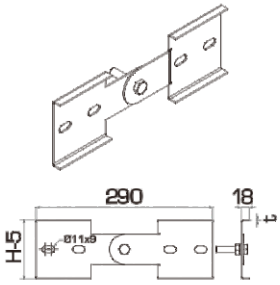


CLHSTPVF

### SPLICE PLATE SET FOR STAND

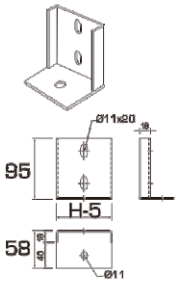


CLHSTPFS

## Straight Cable Ladder Heavy Duty Type H152

### JOINT SET

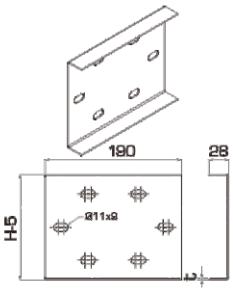


CLHSTPJS

### HORIZONTAL FISHPLATE

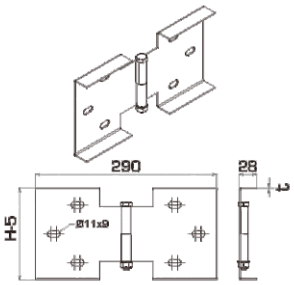


CLHSTPHF

### VERTICAL FISHPLATE

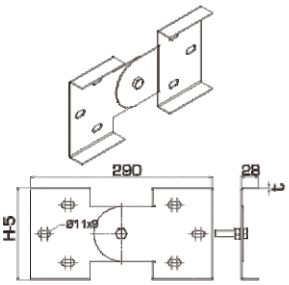


CLHSTPVF

### SPLICE PLATE SET FOR STAND

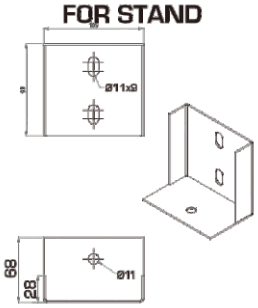


CLHSTPFS

GoldenPiping[ID]




**PT. Golden Piping Indonesia**

**Office :**
Golden Building
Jl.Raya Legok-Karawaci
No.57-58 Kelapa Dua, Kec.Kelapa Dua,
Kab.Tangerang - Banten
15811, Indonesia

**Factory :**
Jl. Diklat Pemda No.91, Bojong Nangka,
Kec. Klp. Dua, Kabupaten Tangerang,
Banten 15810

+62 21 3893 8383, +62 21 3893 3333
info@goldenpiping.id
www.goldenpiping.id